OM-2221 186 183G

March 2003

Processes

Submerged (SAW) Welding

Description

Arc Welding Power Source

Summit Arc™ 1000/1250

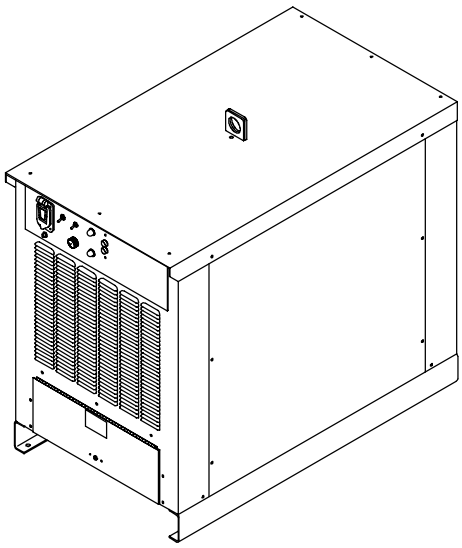

OWNER'S MANUAL

Visit our website at

www.MillerWelds.com

From Miller to You

Thank you and *congratulations* on choosing Miller. Now you can get the job done and get it done right. We know you don't have time to do it any other way.

That's why when Niels Miller first started building arc welders in 1929, he made sure his products offered long-lasting value and superior quality. Like you, his customers couldn't afford anything less. Miller products had to be more than the best they could be. They had to be the best you could buy.

Today, the people that build and sell Miller products continue the tradition. They're just as committed to providing equipment and service that meets the high standards of quality and value established in 1929.

This Owner's Manual is designed to help you get the most out of your Miller products. Please take time to read the Safety precautions. They will help you protect yourself against potential hazards on the worksite. We've made installation and operation quick and easy. With Miller you can count on years of reliable service with proper maintenance. And if for some reason the unit needs repair, there's a Troubleshooting section that will help you figure out what the problem is. The parts list will then help you to decide the exact part you may need to fix the problem. Warranty and service information for your particular model are also provided.

ISO 9001 REGISTERED QUALITY SYSTEM

Miller is the first welding equipment manufacturer in the U.S.A. to be registered to the ISO 9001 Quality System Standard.

Miller Electric manufactures a full line of welders and welding related equipment. For information on other quality Miller products, contact your local Miller distributor to receive the latest full line catalog orindividual catalog sheets. **To locate your nearest distributor or service agency call 1-800-4-A-Miller, or visit us at www.MillerWelds.com on the web.**

TRUE BLUE® WARRANTY

Working as hard as you do – every power source from Miller is backed by the most hassle-free warranty in the business.

Miller offers a Technical Manual which provides more detailed service and parts information for your unit. To obtain a Technical Manual, contact your local distributor. Your distributor can also supply you with Welding Process Manuals such as SMAW, GTAW, GMAW, and GMAW-P.

Miller®

The following terms are used interchangeably throughout this manual:
TIG = GTAW
Stick = SMAW

⚠ WARNING

This product, when used for welding or cutting, produces fumes or gases which contain chemicals known to the State of California to cause birth defects and, in some cases, cancer. (California Health & Safety Code Section 25249.5 et seq.)

TABLE OF CONTENTS

SECTION 1 – SAFETY PRECAUTIONS - READ BEFORE USING 1
1-1. Symbol Usage 1
1-2. Arc Welding Hazards 1
1-3. Additional Symbols for Installation, Operation, and Maintenance 3
1-4. Principal Safety Standards 3
1-5. EMF Information 4
SECTION 1 – CONSIGNES DE SECURITE – LIRE AVANT UTILISATION 5
1-1. Signification des symboles 5
1-2. Dangers relatifs au soudage à l'arc 5
1-3. Dangers supplémentaires en relation avec l'installation, le fonctionnement et la maintenance 7
1-4. Principales normes de sécurité 8
1-5. Information sur les champs électromagnétiques 8
SECTION 2 – INSTALLATION 9
2-1. Specifications 9
2-2. Duty Cycle and Overheating 9
2-3. Volt-Ampere Curves 10
2-4. Dimensions And Weight 11
2-5. Symbol Definitions 11
2-6. Manufacturer's Rating Label For CE Products 12
2-7. Selecting a Location 12
2-8. Weld Output Terminals and Selecting Cable Sizes 13
2-9. Selecting AC or DC Output 14
2-10. Terminal Strip TE3 and Remote 14 Receptacle RC7 Information 14
2-11. Connecting Remote Control 15
2-12. 115 Volts AC Receptacle And Circuit Breaker (460 And 575 Volt Input Models) 16
2-13. 230 Volts AC Receptacle And Circuit Breakers (400 Volt Input Models) 16
2-14. Electrical Service Guide 17
2-15. Connecting Input Power 17
2-16. Matching Primary Lines L1, L2, And L3 When Using Multiple Units 18
SECTION 3 – MAKING WELD OUTPUT CONNECTIONS 19
3-1. Work And Electrode Cable Connections For Single DC or AC Arcs 19
3-2. Using Multiple Units: DC Lead Arc, One or More AC Trailing Arcs With Separate Electrodes 20
3-3. Using Multiple Units: Two or More AC Arcs With Separate Electrodes 21
3-4. Using Multiple Units: Parallel DC Output Connections 22
3-5. Using Multiple Units: Parallel AC Output Connections 23
3-6. Synchronizing Outputs For Parallel AC Arcs 24
3-7. Using Non-Parallel AC Arcs With A 60° Phase Shift - Terminal Strip TE4 Connections 25
3-8. Control Board PC1 Connections For Non-Parallel AC Arcs With 60° Phase Shift Or Parallel Synchronized (0° Phase Shift) AC Arcs 26
3-9. Testing AC Output Units For Correct Phasing Prior to Parallel Operation 27
SECTION 4 – OPERATION 28
4-1. Front Panel Controls (Non-CE Models) 28
4-2. Front Panel Controls (CE Models) 29
SECTION 5 – MAINTENANCE AND TROUBLESHOOTING 30
5-1. Routine Maintenance 30
5-2. Fuses F1 And F2 30
5-3. Access Area Circuit Breakers 31
5-4. Troubleshooting 31
SECTION 6 – ELECTRICAL DIAGRAMS 32
SECTION 7 – PARTS LIST 34

Declaration of Conformity For European Community (CE) Products

NOTE ☞	*This information is provided for units with CE certification (see rating label on unit.)*

Manufacturer's Name: Miller Electric Mfg. Co.

Manufacturer's Address: 1635 W. Spencer Street
Appleton, WI 54914 USA

Declares that the product: **Summit Arc™ 1000/1250**

conforms to the following Directives and Standards:

Directives

Low Voltage Directive: 72/23/EEC

Machinery Directives: 89/392/EEC, 91/368/EEC, 93/C 133/04, 93/68/EEC

Electromagnetic Compatibility Directives: 89/336, 92/31/EEC

Standards

Safety Requirements for Arc Welding Equipment part 1: EN 60974-1: 1993

Arc Welding Equipment Part 1: Welding Power Sources: IEC 974-1
(April 1995 – Draft revision)

Degrees of Protection provided by Enclosures (IP code): IEC 529: 1989

Insulation coordination for equipment within low-voltage systems:
Part 1: Principles, requirements and tests: IEC 664-1: 1992

Electromagnetic compatibility (EMC) Product standard for arc welding equipment:
EN50199: January 1997

European Contact: Mr. Danilo Fedolfi, Managing Director
ITW WELDING PRODUCTS ITALY S.r.l.
Via Privata Iseo 6/E
20098 San Giuliano
Milanese, Italy

Telephone: 39(02)98290-1
Fax: 39(02)98290-203

SECTION 1 – SAFETY PRECAUTIONS - READ BEFORE USING

1-1. Symbol Usage

Means Warning! Watch Out! There are possible hazards with this procedure! The possible hazards are shown in the adjoining symbols.

▲ **Marks a special safety message.**

☞ *Means "Note"; not safety related.*

This group of symbols means Warning! Watch Out! possible ELECTRIC SHOCK, MOVING PARTS, and HOT PARTS hazards. Consult symbols and related instructions below for necessary actions to avoid the hazards.

1-2. Arc Welding Hazards

▲ **The symbols shown below are used throughout this manual to call attention to and identify possible hazards. When you see the symbol, watch out, and follow the related instructions to avoid the hazard. The safety information given below is only a summary of the more complete safety information found in the Safety Standards listed in Section 1-4. Read and follow all Safety Standards.**

▲ **Only qualified persons should install, operate, maintain, and repair this unit.**

▲ **During operation, keep everybody, especially children, away.**

ELECTRIC SHOCK can kill.

Touching live electrical parts can cause fatal shocks or severe burns. The electrode and work circuit is electrically live whenever the output is on. The input power circuit and machine internal circuits are also live when power is on. In semiautomatic or automatic wire welding, the wire, wire reel, drive roll housing, and all metal parts touching the welding wire are electrically live. Incorrectly installed or improperly grounded equipment is a hazard.

- Do not touch live electrical parts.
- Wear dry, hole-free insulating gloves and body protection.
- Insulate yourself from work and ground using dry insulating mats or covers big enough to prevent any physical contact with the work or ground.
- Do not use AC output in damp areas, if movement is confined, or if there is a danger of falling.
- Use AC output ONLY if required for the welding process.
- If AC output is required, use remote output control if present on unit.
- Disconnect input power or stop engine before installing or servicing this equipment. Lockout/tagout input power according to OSHA 29 CFR 1910.147 (see Safety Standards).
- Properly install and ground this equipment according to its Owner's Manual and national, state, and local codes.
- Always verify the supply ground – check and be sure that input power cord ground wire is properly connected to ground terminal in disconnect box or that cord plug is connected to a properly grounded receptacle outlet.
- When making input connections, attach proper grounding conductor first – double-check connections.
- Frequently inspect input power cord for damage or bare wiring – replace cord immediately if damaged – bare wiring can kill.
- Turn off all equipment when not in use.
- Do not use worn, damaged, undersized, or poorly spliced cables.
- Do not drape cables over your body.
- If earth grounding of the workpiece is required, ground it directly with a separate cable.
- Do not touch electrode if you are in contact with the work, ground, or another electrode from a different machine.
- Use only well-maintained equipment. Repair or replace damaged parts at once. Maintain unit according to manual.
- Wear a safety harness if working above floor level.
- Keep all panels and covers securely in place.
- Clamp work cable with good metal-to-metal contact to workpiece or worktable as near the weld as practical.
- Insulate work clamp when not connected to workpiece to prevent contact with any metal object.
- Do not connect more than one electrode or work cable to any single weld output terminal.

SIGNIFICANT DC VOLTAGE exists after removal of input power on inverters.

- Turn Off inverter, disconnect input power, and discharge input capacitors according to instructions in Maintenance Section before touching any parts.

FUMES AND GASES can be hazardous.

Welding produces fumes and gases. Breathing these fumes and gases can be hazardous to your health.

- Keep your head out of the fumes. Do not breathe the fumes.
- If inside, ventilate the area and/or use exhaust at the arc to remove welding fumes and gases.
- If ventilation is poor, use an approved air-supplied respirator.
- Read the Material Safety Data Sheets (MSDSs) and the manufacturer's instructions for metals, consumables, coatings, cleaners, and degreasers.
- Work in a confined space only if it is well ventilated, or while wearing an air-supplied respirator. Always have a trained watchperson nearby. Welding fumes and gases can displace air and lower the oxygen level causing injury or death. Be sure the breathing air is safe.
- Do not weld in locations near degreasing, cleaning, or spraying operations. The heat and rays of the arc can react with vapors to form highly toxic and irritating gases.
- Do not weld on coated metals, such as galvanized, lead, or cadmium plated steel, unless the coating is removed from the weld area, the area is well ventilated, and if necessary, while wearing an air-supplied respirator. The coatings and any metals containing these elements can give off toxic fumes if welded.

ARC RAYS can burn eyes and skin.

Arc rays from the welding process produce intense visible and invisible (ultraviolet and infrared) rays that can burn eyes and skin. Sparks fly off from the weld.

- Wear a welding helmet fitted with a proper shade of filter to protect your face and eyes when welding or watching (see ANSI Z49.1 and Z87.1 listed in Safety Standards).
- Wear approved safety glasses with side shields under your helmet.
- Use protective screens or barriers to protect others from flash and glare; warn others not to watch the arc.
- Wear protective clothing made from durable, flame-resistant material (leather and wool) and foot protection.

WELDING can cause fire or explosion.

Welding on closed containers, such as tanks, drums, or pipes, can cause them to blow up. Sparks can fly off from the welding arc. The flying sparks, hot workpiece, and hot equipment can cause fires and burns. Accidental contact of electrode to metal objects can cause sparks, explosion, overheating, or fire. Check and be sure the area is safe before doing any welding.

- Protect yourself and others from flying sparks and hot metal.
- Do not weld where flying sparks can strike flammable material.
- Remove all flammables within 35 ft (10.7 m) of the welding arc. If this is not possible, tightly cover them with approved covers.
- Be alert that welding sparks and hot materials from welding can easily go through small cracks and openings to adjacent areas.
- Watch for fire, and keep a fire extinguisher nearby.
- Be aware that welding on a ceiling, floor, bulkhead, or partition can cause fire on the hidden side.
- Do not weld on closed containers such as tanks, drums, or pipes, unless they are properly prepared according to AWS F4.1 (see Safety Standards).
- Connect work cable to the work as close to the welding area as practical to prevent welding current from traveling long, possibly unknown paths and causing electric shock and fire hazards.
- Do not use welder to thaw frozen pipes.
- Remove stick electrode from holder or cut off welding wire at contact tip when not in use.
- Wear oil-free protective garments such as leather gloves, heavy shirt, cuffless trousers, high shoes, and a cap.
- Remove any combustibles, such as a butane lighter or matches, from your person before doing any welding.

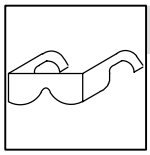

FLYING METAL can injure eyes.

- Welding, chipping, wire brushing, and grinding cause sparks and flying metal. As welds cool, they can throw off slag.
- Wear approved safety glasses with side shields even under your welding helmet.

BUILDUP OF GAS can injure or kill.

- Shut off shielding gas supply when not in use.
- Always ventilate confined spaces or use approved air-supplied respirator.

HOT PARTS can cause severe burns.

- Do not touch hot parts bare handed.
- Allow cooling period before working on gun or torch.

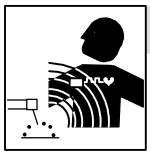

MAGNETIC FIELDS can affect pacemakers.

- Pacemaker wearers keep away.
- Wearers should consult their doctor before going near arc welding, gouging, or spot welding operations.

NOISE can damage hearing.

Noise from some processes or equipment can damage hearing.

- Wear approved ear protection if noise level is high.

CYLINDERS can explode if damaged.

Shielding gas cylinders contain gas under high pressure. If damaged, a cylinder can explode. Since gas cylinders are normally part of the welding process, be sure to treat them carefully.

- Protect compressed gas cylinders from excessive heat, mechanical shocks, slag, open flames, sparks, and arcs.
- Install cylinders in an upright position by securing to a stationary support or cylinder rack to prevent falling or tipping.
- Keep cylinders away from any welding or other electrical circuits.
- Never drape a welding torch over a gas cylinder.
- Never allow a welding electrode to touch any cylinder.
- Never weld on a pressurized cylinder – explosion will result.
- Use only correct shielding gas cylinders, regulators, hoses, and fittings designed for the specific application; maintain them and associated parts in good condition.
- Turn face away from valve outlet when opening cylinder valve.
- Keep protective cap in place over valve except when cylinder is in use or connected for use.
- Read and follow instructions on compressed gas cylinders, associated equipment, and CGA publication P-1 listed in Safety Standards.

1-3. Additional Symbols For Installation, Operation, And Maintenance

FIRE OR EXPLOSION hazard.

- Do not install or place unit on, over, or near combustible surfaces.
- Do not install unit near flammables.
- Do not overload building wiring – be sure power supply system is properly sized, rated, and protected to handle this unit.

FALLING UNIT can cause injury.

- Use lifting eye to lift unit only, NOT running gear, gas cylinders, or any other accessories.
- Use equipment of adequate capacity to lift and support unit.
- If using lift forks to move unit, be sure forks are long enough to extend beyond opposite side of unit.

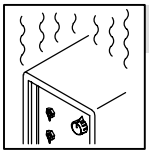

OVERUSE can cause OVERHEATING

- Allow cooling period; follow rated duty cycle.
- Reduce current or reduce duty cycle before starting to weld again.
- Do not block or filter airflow to unit.

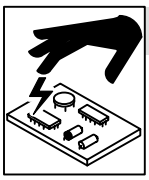

STATIC (ESD) can damage PC boards.

- Put on grounded wrist strap BEFORE handling boards or parts.
- Use proper static-proof bags and boxes to store, move, or ship PC boards.

MOVING PARTS can cause injury.

- Keep away from moving parts.
- Keep away from pinch points such as drive rolls.

WELDING WIRE can cause injury.

- Do not press gun trigger until instructed to do so.
- Do not point gun toward any part of the body, other people, or any metal when threading welding wire.

MOVING PARTS can cause injury.

- Keep away from moving parts such as fans.
- Keep all doors, panels, covers, and guards closed and securely in place.

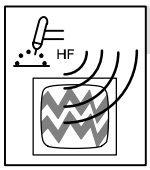

H.F. RADIATION can cause interference.

- High-frequency (H.F.) can interfere with radio navigation, safety services, computers, and communications equipment.
- Have only qualified persons familiar with electronic equipment perform this installation.
- The user is responsible for having a qualified electrician promptly correct any interference problem resulting from the installation.
- If notified by the FCC about interference, stop using the equipment at once.
- Have the installation regularly checked and maintained.
- Keep high-frequency source doors and panels tightly shut, keep spark gaps at correct setting, and use grounding and shielding to minimize the possibility of interference.

ARC WELDING can cause interference.

- Electromagnetic energy can interfere with sensitive electronic equipment such as computers and computer-driven equipment such as robots.
- Be sure all equipment in the welding area is electromagnetically compatible.
- To reduce possible interference, keep weld cables as short as possible, close together, and down low, such as on the floor.
- Locate welding operation 100 meters from any sensitive electronic equipment.
- Be sure this welding machine is installed and grounded according to this manual.
- If interference still occurs, the user must take extra measures such as moving the welding machine, using shielded cables, using line filters, or shielding the work area.

1-4. Principal Safety Standards

Safety in Welding, Cutting, and Allied Processes, ANSI Standard Z49.1, from American Welding Society, 550 N.W. LeJeune Rd, Miami FL 33126 (phone: 305-443-9353, website: www.aws.org).

Recommended Safe Practices for the Preparation for Welding and Cutting of Containers and Piping, American Welding Society Standard AWS F4.1, from American Welding Society, 550 N.W. LeJeune Rd, Miami, FL 33126 (phone: 305-443-9353, website: www.aws.org).

National Electrical Code, NFPA Standard 70, from National Fire Protection Association, P.O. Box 9101, 1 Battery March Park, Quincy, MA 02269–9101 (phone: 617–770–3000, website: www.nfpa.org and www. sparky.org).

Safe Handling of Compressed Gases in Cylinders, CGA Pamphlet P-1, from Compressed Gas Association, 1735 Jefferson Davis Highway, Suite 1004, Arlington, VA 22202–4102 (phone: 703–412–0900, website: www.cganet.com).

Code for Safety in Welding and Cutting, CSA Standard W117.2, from Canadian Standards Association, Standards Sales, 178 Rexdale Boulevard, Rexdale, Ontario, Canada M9W 1R3 (phone: 800–463–6727 or in Toronto 416–747–4044, website: www.csa–international.org).

Practice For Occupational And Educational Eye And Face Protection, ANSI Standard Z87.1, from American National Standards Institute, 11 West 42nd Street, New York, NY 10036–8002 (phone: 212–642–4900, website: www.ansi.org).

Standard for Fire Prevention During Welding, Cutting, and Other Hot Work, NFPA Standard 51B, from National Fire Protection Association, P.O. Box 9101, 1 Battery March Park, Quincy, MA 02269–9101 (phone: 617–770–3000, website: www.nfpa.org and www. sparky.org).

OSHA, Occupational Safety and Health Standards for General Industry, Title 29, Code of Federal Regulations (CFR), Part 1910, Subpart Q, and Part 1926, Subpart J, from U.S. Government Printing Office, Superintendent of Documents, P.O. Box 371954, Pittsburgh, PA 15250 (there are 10 Regional Offices—phone for Region 5, Chicago, is 312–353–2220, website: www.osha.gov).

1-5. EMF Information

Considerations About Welding And The Effects Of Low Frequency Electric And Magnetic Fields

Welding current, as it flows through welding cables, will cause electromagnetic fields. There has been and still is some concern about such fields. However, after examining more than 500 studies spanning 17 years of research, a special blue ribbon committee of the National Research Council concluded that: “The body of evidence, in the committee’s judgment, has not demonstrated that exposure to power-frequency electric and magnetic fields is a human-health hazard.” However, studies are still going forth and evidence continues to be examined. Until the final conclusions of the research are reached, you may wish to minimize your exposure to electromagnetic fields when welding or cutting.

To reduce magnetic fields in the workplace, use the following procedures:

1. Keep cables close together by twisting or taping them.
2. Arrange cables to one side and away from the operator.
3. Do not coil or drape cables around your body.
4. Keep welding power source and cables as far away from operator as practical.
5. Connect work clamp to workpiece as close to the weld as possible.

About Pacemakers:

Pacemaker wearers consult your doctor first. If cleared by your doctor, then following the above procedures is recommended.

SECTION 1 – CONSIGNES DE SÉCURITÉ – À LIRE AVANT UTILISATION

1-1. Signification des symboles

Signifie « Mise en garde. Faire preuve de vigilance. » Cette procédure présente des risques identifiés par les symboles adjacents aux directives.

▲ **Identifie un message de sécurité particulier.**

☞ *Signifie « NOTA » ; n'est pas relatif à la sécurité.*

Ce groupe de symboles signifie « Mise en garde. Faire preuve de vigilance. » Il y a des dangers liés aux CHOCS ÉLECTRIQUES, aux PIÈCES EN MOUVEMENT et aux PIÈCES CHAUDES. Se reporter aux symboles et aux directives ci-dessous afin de connaître les mesures à prendre pour éviter tout danger.

1-2. Dangers relatifs au soudage à l'arc

▲ **Les symboles ci-après sont utilisés tout au long du présent manuel pour attirer l'attention sur les dangers potentiels et les identifier. Lorsqu'on voit un symbole, faire preuve de vigilance et suivre les directives mentionnées afin d'éviter tout danger. Les consignes de sécurité énoncées ci-après ne font que résumer le contenu des normes de sécurité mentionnées à la section 1–4. Lire et respecter toutes ces normes.**

▲ **L'installation, l'utilisation, l'entretien et les réparations ne doivent être confiés qu'à des personnes qualifiées.**

▲ **Pendant l'utilisation de l'appareil, tenir à l'écart toute personne, en particulier les enfants.**

LES DÉCHARGES ÉLECTRIQUES peuvent être mortelles.

Un simple contact avec des pièces sous tension peut causer une électrocution ou des blessures graves. L'électrode et le circuit de soudage sont sous tension dès que l'appareil est en fonctionnement. Le circuit d'entrée et les circuits internes de l'appareil sont également sous tension. En soudage semi–automatique ou automatique, le fil, le dévidoir, le logement des galets d'entraînement et les pièces métalliques en contact avec le fil de soudage sont sous tension. Tout matériel mal installé ou mal mis à la terre présente un danger.

- Ne jamais toucher aux pièces électriques sous tension.
- Porter des gants et des vêtements de protection secs et exempts de trous.
- S'isoler de la pièce et de la terre au moyen de tapis ou autres dispositifs isolants suffisamment grands pour empêcher tout contact physique avec la pièce ou la terre.
- Ne pas se servir d'une source de courant alternatif dans les zones humides, les endroits confinés ou là où on risque de tomber.
- Ne se servir d'une source de courant alternatif QUE si le procédé de soudage l'exige.
- Si l'utilisation d'une source de courant alternatif s'avère nécessaire, se servir de la fonction de télécommande si l'appareil en est équipé.
- Couper l'alimentation ou arrêter le moteur avant de procéder à l'installation, à la réparation ou à l'entretien de l'appareil. Couper/étiqueter l'alimentation selon la norme OSHA 29 CFR 1910.147 (voir les normes de sécurité).
- Installer et mettre à la terre correctement l'appareil conformément à son manuel d'utilisation et aux codes nationaux, provinciaux et municipaux.
- Toujours vérifier la terre du cordon d'alimentation – Vérifier et s'assurer que le fil de terre du cordon d'alimentation est bien raccordé à la borne de terre du sectionneur ou que la fiche du cordon est raccordée à une prise correctement mise à la terre.
- Pour exécuter les branchements d'entrée, fixer d'abord le conducteur de mise à la terre adéquat et contre–vérifier les connexions.
- Vérifier fréquemment le cordon d'alimentation et s'assurer qu'il n'est ni endommagé ni dénudé ; le remplacer immédiatement s'il est endommagé – tout câble dénudé peut causer une électrocution.
- Mettre l'appareil hors tension quand on ne l'utilise pas.
- Ne pas utiliser de câbles usés, endommagés, de calibre insuffisant ou mal épissés.
- Ne pas s'enrouler les câbles autour du corps.
- Si la pièce soudée doit être mise à la terre, le faire directement avec un câble distinct.
- Ne pas toucher l'électrode quand on est en contact avec la pièce, la terre ou une électrode d'une autre machine.
- N'utiliser que du matériel en bon état. Réparer ou remplacer sur–le–champ les pièces endommagées. Entretenir l'appareil conformément au présent manuel.
- Porter un harnais de sécurité quand on travaille en hauteur.
- Maintenir solidement en place tous les panneaux et capots.
- Fixer le câble de retour de façon à obtenir un bon contact métal sur métal avec la pièce à souder ou la table de travail, le plus près possible de la soudure.
- Ne pas connecter plus d'une électrode ou plus d'un câble de masse à un même terminal de sortie.

Il subsiste un COURANT CONTINU IMPORTANT dans les convertisseurs après la suppression de l'alimentation électrique.

- Arrêter les convertisseurs, débrancher le courant électrique et décharger les condensateurs d'alimentation selon les instructions énoncées à la section Entretien avant de toucher les pièces.

LES FUMÉES ET LES GAZ peuvent être dangereux.

Le soudage génère des fumées et des gaz dont l'inhalation peut être dangereuse pour la santé.

- Se tenir à distance des fumées et ne pas les inhaler.
- À l'intérieur, ventiler la zone et/ou utiliser un dispositif d'aspiration au niveau de l'arc pour l'évacuation des fumées et des gaz de soudage.
- Si la ventilation est insuffisante, utiliser un respirateur à adduction d'air agréé.
- Lire les fiches techniques de santé–sécurité (FTSS) et les instructions du fabricant concernant les métaux, les consommables, les revêtements, les nettoyants et les dégraisseurs.
- Ne travailler dans un espace clos que s'il est bien ventilé ou porter un respirateur à adduction d'air. Demander toujours à un surveillant dûment formé de se tenir à proximité. Des fumées et des gaz de soudage peuvent se substituer à l'air, abaisser la teneur en oxygène et causer des lésions ou des accidents mortels. S'assurer que l'air est respirable.
- Ne pas souder à proximité d'opérations de dégraissage, de nettoyage ou de pulvérisation. La chaleur et les rayons de l'arc peuvent réagir en présence de vapeurs et former des gaz hautement toxiques et irritants.
- Ne pas souder de métaux munis d'un revêtement, tels que la tôle d'acier galvanisée, plombée ou cadmiée, à moins que le revêtement n'ait été enlevé dans la zone de soudage, que l'endroit soit bien ventilé, et si nécessaire, porter un respirateur à adduction d'air. Les revêtements et tous les métaux renfermant ces éléments peuvent dégager des fumées toxiques lorsqu'on les soude.

LES RAYONS DE L'ARC peuvent causer des brûlures oculaires et cutanées.

Le rayonnement de l'arc génère des rayons visibles et invisibles intenses (ultraviolets et infrarouges) susceptibles de causer des brûlures oculaires et cutanées. Des étincelles sont projetées pendant le soudage.

- Porter un masque de soudage muni d'un filtre de la nuance adéquate pour se protéger le visage et les yeux pendant le soudage ou pour regarder (voir les normes de sécurité ANSI Z49.1 et Z87.1).
- Porter des lunettes de sécurité à écrans latéraux sous le masque.
- Utiliser des écrans ou des barrières pour protéger les tiers de l'éclat éblouissant ou aveuglant de l'arc ; leur demander de ne pas regarder l'arc.
- Porter des vêtements de protection en matière durable et ignifuge (cuir ou laine) et des chaussures de sécurité.

LE SOUDAGE peut causer un incendie ou une explosion.

Le soudage effectué sur des récipients fermés tels que des réservoirs, des fûts ou des conduites peut causer leur éclatement. Des étincelles peuvent être projetées de l'arc de soudure. La projection d'étincelles, les pièces chaudes et les équipements chauds peuvent causer des incendies et des brûlures. Le contact accidentel de l'électrode avec tout objet métallique peut causer des étincelles, une explosion, un surchauffement ou un incendie. Avant de commencer le soudage, vérifier et s'assurer que l'endroit ne présente pas de danger.

- Se protéger et protéger les tiers de la projection d'étincelles et de métal chaud.
- Ne pas souder à un endroit où des étincelles peuvent tomber sur des substances inflammables.
- Placer toutes les substances inflammables à une distance de 10,7 m de l'arc de soudage. En cas d'impossibilité, les recouvrir soigneusement avec des protections agréées.
- Des étincelles et des matières en fusion peuvent facilement passer même par des fissures et des ouvertures de petites dimensions.
- Surveiller tout déclenchement d'incendie et tenir un extincteur à proximité.
- Le soudage effectué sur un plafond, un plancher, une paroi ou une cloison peut déclencher un incendie de l'autre côté.
- Ne pas souder des récipients fermés tels que des réservoirs, des fûts ou des conduites, à moins qu'ils n'aient été préparés conformément à l'AWS F4.1 (voir les normes de sécurité).
- Brancher le câble sur la pièce le plus près possible de la zone de soudage pour éviter que le courant ne circule sur une longue distance, par des chemins inconnus, et ne cause des risques d'électrocution et d'incendie.
- Ne pas utiliser le poste de soudage pour dégeler des conduites gelées.
- En cas de non utilisation, enlever la baguette d'électrode du porte–électrode ou couper le fil au raz du tube–contact.
- Porter des vêtements de protection exempts d'huile tels que des gants en cuir, une chemise en tissu épais, des pantalons sans revers, des chaussures montantes et un masque.
- Avant de souder, retirer tout produit combustible de ses poches, tel qu'un briquet au butane ou des allumettes.

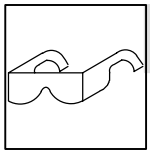

LES PARTICULES PROJETÉES peuvent blesser les yeux.

- Le soudage, le burinage, le passage de la pièce à la brosse métallique et le meulage provoquent l'émission d'étincelles et de particules métalliques. Pendant leur refroidissement, les soudures risquent de projeter du laitier.
- Porter des lunettes de sécurité à écrans latéraux agréés, même sous le masque de soudage.

LES ACCUMULATIONS DE GAZ peuvent causer des blessures ou même la mort.

- Couper l'alimentation en gaz protecteur en cas de non utilisation.
- Veiller toujours à bien ventiler les espaces confinés ou porter un respirateur à adduction d'air agréé.

LES PIÈCES CHAUDES peuvent causer des brûlures graves.

- Ne pas toucher les pièces chaudes à main nue.
- Prévoir une période de refroidissement avant d'utiliser le pistolet ou la torche.

LES CHAMPS MAGNÉTIQUES peuvent perturber le fonctionnement des stimulateurs cardiaques.

- Les personnes qui portent un stimulateur cardiaque doivent se tenir à distance.
- Ils doivent consulter leur médecin avant de s'approcher d'un lieu où on exécute des opérations de soudage à l'arc, de gougeage ou de soudage par points.

LE BRUIT peut affecter l'ouïe.

Le bruit de certains processus et équipements peut affecter l'ouïe.

- Porter des protecteurs d'oreille agréés si le niveau sonore est trop élevé.

Les BOUTEILLES endommagées peuvent exploser.

Les bouteilles de gaz protecteur contiennent du gaz sous haute pression. Toute bouteille endommagée peut exploser. Comme les bouteilles de gaz font normalement partie du procédé de soudage, les manipuler avec précaution.

- Protéger les bouteilles de gaz comprimé de la chaleur excessive, des chocs mécaniques, du laitier, des flammes nues, des étincelles et des arcs.
- Placer les bouteilles debout en les fixant dans un support stationnaire ou dans un porte–bouteilles pour les empêcher de tomber ou de se renverser.
- Tenir les bouteilles éloignées des circuits de soudage ou autres circuits électriques.
- Ne jamais poser une torche de soudage sur une bouteille de gaz.
- Ne jamais mettre une électrode de soudage en contact avec une bouteille de gaz.
- Ne jamais souder une bouteille contenant du gaz sous pression – elle risquerait d'exploser.
- N'utiliser que les bouteilles de gaz protecteur, régulateurs, tuyaux et raccords adéquats pour l'application envisagée ; les maintenir en bon état, ainsi que les pièces connexes.
- Détourner la tête lorsqu'on ouvre la soupape d'une bouteille.
- Laisser le capuchon protecteur sur la soupape, sauf en cas d'utilisation ou de branchement de la bouteille
- Lire et suivre les instructions concernant les bouteilles de gaz comprimé, les équipements associés et les publications P–1 de la CGA, mentionnées dans les normes de sécurité.

1-3. Autres symboles relatifs à l'installation, au fonctionnement et à l'entretien de l'appareil.

Risque D'INCENDIE OU D'EXPLOSION

- Ne pas placer l'appareil sur une surface inflammable, ni au–dessus ou à proximité d'elle.
- Ne pas installer l'appareil à proximité de produits inflammables.
- Ne pas surcharger l'installation électrique – s'assurer que l'alimentation est correctement dimensionnée et protégée avant de mettre l'appareil en service.

LA CHUTE DE L'APPAREIL peut blesser.

- N'utiliser que l'anneau de levage pour lever l'appareil. NE PAS utiliser le chariot, les bouteilles de gaz ou tout autre accessoire.
- Utiliser un engin de capacité adéquate pour lever l'appareil.
- Si on utilise un chariot élévateur pour déplacer l'unité, s'assurer que les fourches sont suffisamment longues pour dépasser du côté opposé de l'appareil.

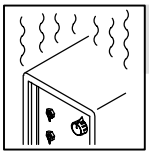

L'EMPLOI EXCESSIF peut FAIRE SURCHAUFFER L'ÉQUIPEMENT.

- Prévoir une période de refroidissement ; respecter le cycle opératoire nominal.
- Réduire le courant ou le cycle opératoire avant de reprendre le soudage.
- Ne pas obstruer les orifices ou filtrer l'alimentation en air du poste.

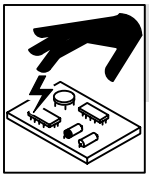

LES CHARGES ÉLECTROSTATIQUES peuvent endommager les circuits imprimés.

- Mettre un bracelet antistatique AVANT de manipuler des cartes ou des pièces.
- Utiliser des pochettes et des boîtes antistatiques pour stocker, déplacer ou expédier des cartes de circuits imprimés.

LES PIÈCES MOBILES peuvent causer des blessures.

- Se tenir à l'écart des pièces mobiles.
- Se tenir à l'écart des points de coincement tels que les dévidoirs.

LES FILS DE SOUDAGE peuvent causer des blessures.

- Ne pas appuyer sur la gâchette avant d'en avoir reçu l'instruction.
- Ne pas diriger le pistolet vers soi, vers d'autres personnes ou vers toute pièce mécanique en engageant le fil de soudage.

LES ORGANES MOBILES peuvent causer des blessures.

- Se tenir à l'écart des organes mobiles comme les ventilateurs.
- Maintenir fermés et bien fixés les portes, panneaux, recouvrements et dispositifs de protection.

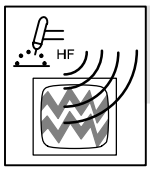

LE RAYONNEMENT HAUTE FRÉQUENCE (H. F.) risque de causer des interférences.

- Le rayonnement haute fréquence peut causer des interférences avec les équipements de radionavigation et de communication, les services de sécurité et les ordinateurs.
- Ne demander qu'à des personnes qualifiées familiarisées avec les équipements électroniques de faire fonctionner l'installation.
- L'utilisateur est tenu de faire corriger rapidement par un électricien qualifié les interférences causées par l'installation.
- Si la Federal Communications Commission signale des interférences, arrêter immédiatement l'appareil.
- Faire régulièrement contrôler et entretenir l'installation.
- Maintenir soigneusement fermés les panneaux et les portes des sources de haute fréquence, maintenir le jeu d'éclatement au réglage adéquat et utiliser une terre et un blindage pour réduire les interférences éventuelles.

LE SOUDAGE À L'ARC peut causer des interférences.

- L'énergie électromagnétique peut causer des interférences avec l'équipement électronique sensible tel que les ordinateurs et l'équipement commandé par ordinateur tel que les robots.
- Veiller à ce que tout l'équipement de la zone de soudage soit compatible au point de vue électromagnétique.
- Pour réduire la possibilité d'interférence, maintenir les câbles de soudage aussi courts que possible, les grouper, et les poser aussi bas que possible (par ex. : à terre).
- Veiller à souder à une distance de 100 mètres de tout équipement électronique sensible.
- Veiller à ce que le poste de soudage soit posé et mis à la terre conformément au présent manuel.
- En cas d'interférences après exécution des directives précédentes, il incombe à l'utilisateur de prendre des mesures supplémentaires telles que le déplacement du poste, l'utilisation de câbles blindés, l'utilisation de filtres de ligne ou la pose de protecteurs dans la zone de travail.

LES CHAMPS MAGNÉTIQUES peuvent affecter les stimulateurs cardiaques.

- Porteurs de stimulateur cardiaque, restez à distance.
- Les porteurs d'un stimulateur cardiaque doivent d'abord consulter leur médecin avant de s'approcher des opérations de soudage à l'arc, de gougeage ou de soudage par points.

1-4. Principales normes de sécurité

Safety in Welding, Cutting, and Allied Processes, norme ANSI Z49.1, de l'American Welding Society, 550 N.W. LeJeune Rd, Miami FL 33126 (téléphone : (305) 443–9353, site Web : www.aws.org).

Recommended Safe Practices for the Preparation for Welding and Cutting of Containers and Piping, norme American Welding Society AWS F4.1, de l'American Welding Society, 550 N.W. LeJeune Rd, Miami, FL 33126 (téléphone : (305) 443–9353, site Web : www.aws.org).

National Electrical Code, norme NFPA 70, de la National Fire Protection Association, P.O. Box 9101, 1 Battery March Park, Quincy, MA 02269–9101 (téléphone : (617) 770–3000, sites Web : www.nfpa.org et www.sparky.org).

Safe Handling of Compressed Gases in Cylinders, brochure CGA P–1, de la Compressed Gas Association, 1735 Jefferson Davis Highway, Suite 1004, Arlington, VA 22202–4102 (téléphone : (703) 412–0900, site Web : www.cganet.com).

Code for Safety in Welding and Cutting, norme CSA W117.2, de la Canadian Standards Association, Standards Sales, 178 boulevard Rexdale, Rexdale (Ontario) Canada M9W 1R3 (téléphone : (800) 463–6727 ou à Toronto : (416) 747–4044, site Web : www.csa–international.org).

Practice For Occupational And Educational Eye And Face Protection, norme ANSI Z87.1, de l'American National Standards Institute, 11 West 42nd Street, New York, NY 10036–8002 (téléphone : (212) 642–4900, site Web : www.ansi.org).

Standard for Fire Prevention During Welding, Cutting, and Other Hot Work, norme NFPA 51B, de la National Fire Protection Association, P.O. Box 9101, 1 Battery March Park, Quincy, MA 02269–9101 (téléphone : (617) 770–3000, site Web : www.nfpa.org et www.sparky.org).

OSHA, Occupational Safety and Health Standards for General Industry, Title 29, Code of Federal Regulations (CFR), Part 1910, Subpart Q, and Part 1926, Subpart J, de l'U.S. Government Printing Office, Superintendent of Documents, P.O. Box 371954, Pittsburgh, PA 15250 (il y a 10 bureaux régionaux – Téléphone pour la Région 5, Chicago : (312) 353–2220, site Web : www.osha.gov).

1-5. Information sur les champs électromagnétiques

Données sur le soudage électrique et les effets des champs magnétiques basse fréquence sur l'organisme

En parcourant les câbles de soudage, le courant crée des champs électromagnétiques. Les effets potentiels de tels champs restent préoccupants. Cependant, après avoir examiné plus de 500 études qui ont été faites pendant une période de recherche de 17 ans, un comité de spécialistes du National Research Council a conclu : « L'accumulation de preuves n'a pas démontré que l'exposition aux champs magnétiques et aux champs électriques à haute fréquence constitue un risque pour la santé humaine ». Toutefois, les études et l'examen des preuves se poursuivent. En attendant les conclusions finales de la recherche, il serait souhaitable de réduire l'exposition aux champs électromagnétiques pendant le soudage ou le coupage.

Afin de réduire les champs électromagnétiques en milieu de travail, respecter les consignes suivantes :

1. Garder les câbles ensemble en les torsadant ou en les fixant avec du ruban adhésif.
2. Mettre tous les câbles du côté opposé à l'opérateur.
3. Ne pas s'enrouler les câbles autour du corps.
4. Garder le poste de soudage et les câbles le plus loin possible de soi.
5. Placer la pince de masse le plus près possible de la zone de soudage.

Consignes relatives aux stimulateurs cardiaques :

Les personnes qui portent un stimulateur cardiaque doivent avant tout consulter leur médecin. Si ce dernier les déclare aptes, il leur est recommandé de respecter les consignes ci-dessus.

SECTION 2 – INSTALLATION

NOTE ☞	*With 60 Hz input power, the ac weld output of this unit is 10 Hz. With 50 Hz input, the ac weld output is 8.33 Hz.*

2-1. Specifications

AC or DC Rated Output	Voltage Range in CV Mode	Amperage Range in CC Mode	Max. Open-Circuit Voltage	RMS Amps Input at Rated Load Output, 3-Phase at NEMA Load Voltages and Class I Rating			KVA	KW
				380/400/415 V (50/60 Hz)	460 V (60 Hz)	575 V (60 Hz)		
1000 A at 44 V, 100% Duty Cycle; 1250 A at 44 V, 60% Duty Cycle	25–44 V	250–1250 A	71 V	143 (3*)	124 (3*)	100 (3*)	98 (2.37*)	53 (0.95*)
*While idling								

2-2. Duty Cycle and Overheating

Duty Cycle is percentage of 10 minutes that unit can weld at rated load without overheating.

If unit overheats, high temperature shutdown light turns On, thermostat(s) opens, output stops, and cooling fan runs. Wait fifteen minutes for unit to cool. Reduce amperage or duty cycle before welding.

▲ **Exceeding duty cycle can damage unit and void warranty.**

100% Duty Cycle At 1000 Amperes

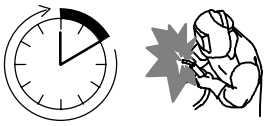

Continuous Welding

Overheating

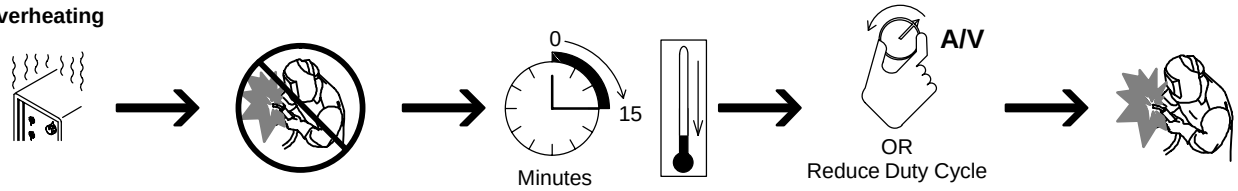

duty1 4/95 – SA-181 560

2-3. Volt-Ampere Curves

Volt-ampere curves show minimum and maximum voltage and amperage output capabilities of unit. Curves of other settings fall between curves shown.

A. CC Mode

DC Output

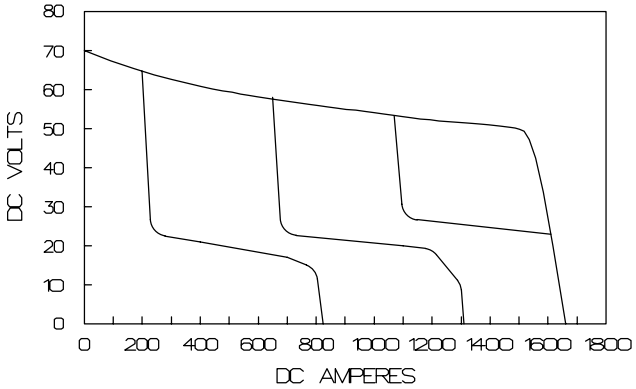

AC Output

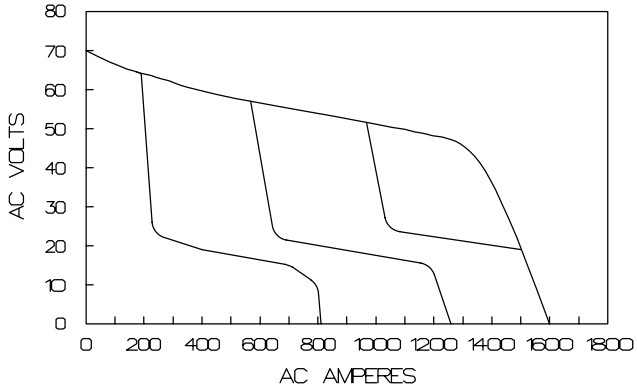

B. CV Mode

DC Output

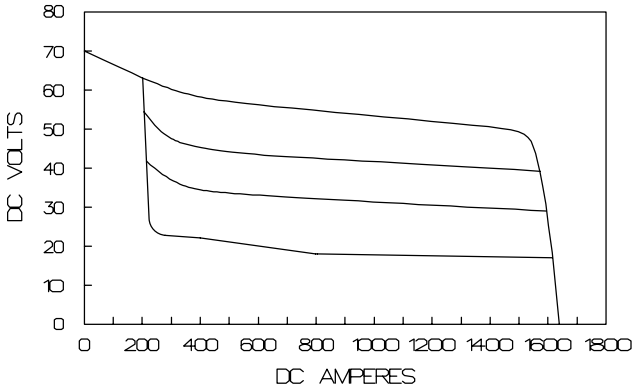

AC Output

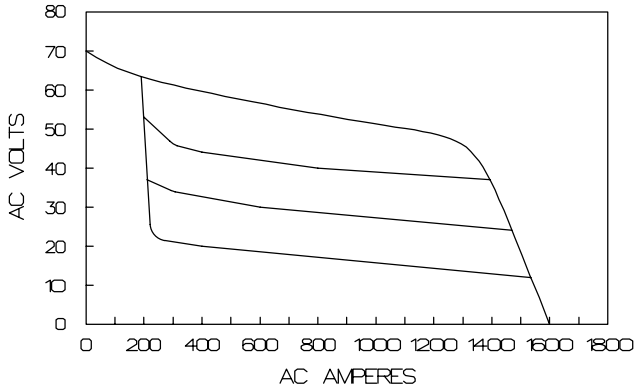

va_curve1 4/95 – SA-189 242 / SA-189 240 / SA-189 243 / SA-189 241

2-4. Dimensions And Weight

Dimensions	
Height*	44 in (1118 mm)
Width*	27-1/4 in (692 mm)
Depth*	46 in (1168 mm)
A	1-7/8 in (48 mm)
B	44-1/8 in (1120 mm)
C	11/16 in (17 mm)
D	26-1/16 in (662 mm)
E	4 holes: 21/32 in (6.5 mm) dia

Weight

1225 lb (540 kg)

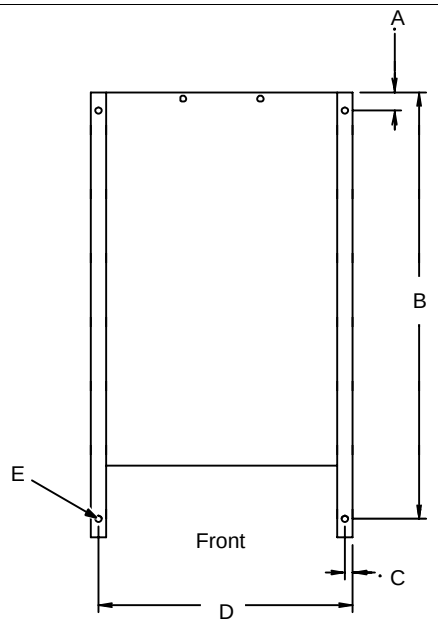

* Includes lifting eye, handles, hardware, etc.

2-5. Symbol Definitions

NOTE	*Some symbols are found only on CE products.*

A	Amperage	V	Voltage	Hz	Hertz		Direct Current (DC)
	Alternating Current (AC)		Panel/Local		Line Connection	3	Three Phase
	Output	I	On	V	Voltage Input	O	Off
	Submerged Arc Welding (SAW)		Read Operator's Manual		Remote	X	Duty Cycle
%	Percent	U_0	Rated No-Load Voltage (Average)	U_1	Rated Supply Voltage		Circuit Breaker
U_2	Conventional Load Voltage	I_2	Rated Welding Current		Protective Earth (Ground)	I_{1max}	Rated Maximum Supply Current
I_{1eff}	Maximum Effective Supply Current		3-Phase Power Source With AC/DC Output		Temperature		Ventilating And Air Circulating Fan
	Increase	IP	Degree Of Protection		Air Carbon Arc Cutting (CAC-A)		Shielding Metal Arc Welding (SMAW)
	Gas Metal Arc Welding GMAW)						

2-6. Manufacturer's Rating Label For CE Products

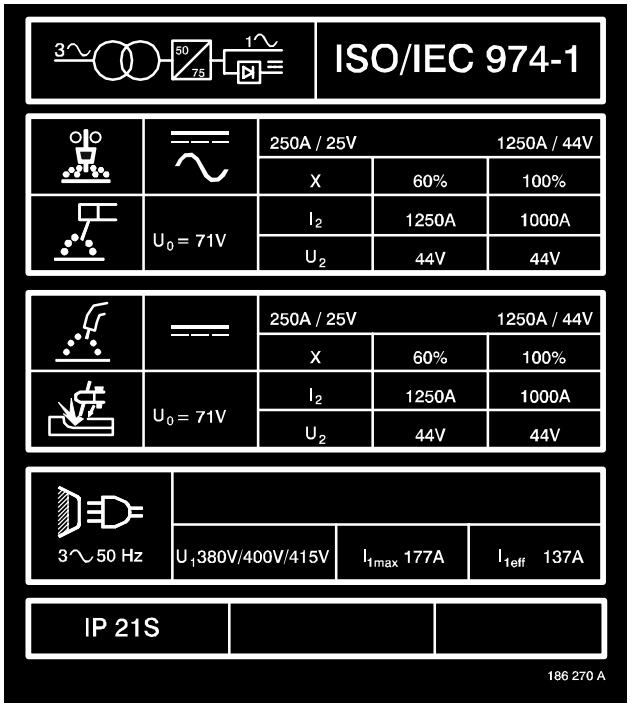

2-7. Selecting a Location

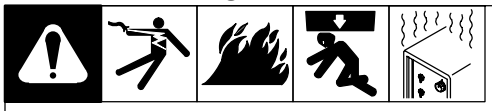

Movement

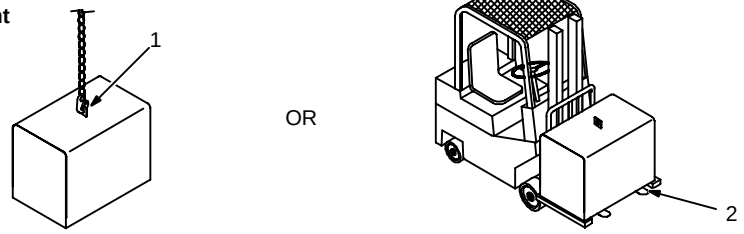

Location

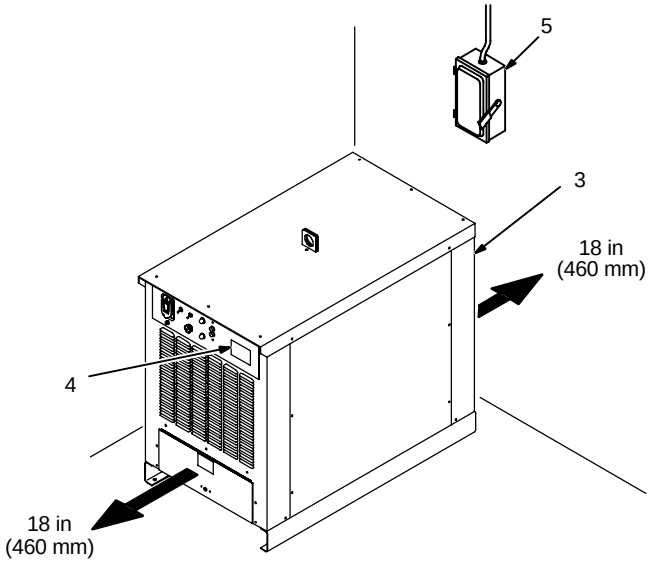

1 Lifting Eye

2 Lifting Forks

Use lifting eye or lifting forks to move unit.

If using lifting forks, extend forks beyond opposite side of unit.

3 Rating Label

4 Plate Label

Use rating or plate label to determine input power needs.

5 Line Disconnect Device

Locate unit near correct input power supply.

▲ **Special installation may be required where gasoline or volatile liquids are present – see NEC Article 511 or CEC Section 20.**

loc_2 3/96 - ST-801 881-A

2-8. Weld Output Terminals and Selecting Cable Sizes

NOTE ☞

In the table below, when multiple numbers are indicated separated by a hyphen, the number to the left of the hyphen indicates how many cables are to be used, and the number to the right indicates the size of the cable to be used. For example, 3-3/0 indicates that 3 cables of 3/0 gauge need to be used for electrode and work connections.

Weld Output Terminals

▲ Turn Off welding power source and disconnect input power before connecting to weld output terminals.

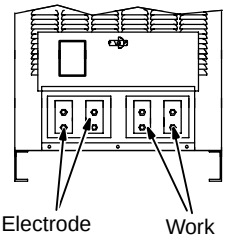

Requires cable lugs with 5/8 in diameter holes.

15/16 in

Welding Amperes	Total Cable (Copper) Length In Weld Circuit Not Exceeding							
	100 ft (30 m) Or Less		150 ft (45 m)	200 ft (60 m)	250 ft (70 m)	300 ft (90 m)	350 ft (105 m)	400 ft (120 m)
	10 – 60% Duty Cycle	60 – 100% Duty Cycle	10 – 100% Duty Cycle					
100	4	4	4	3	2	1	1/0	1/0
150	3	3	2	1	1/0	2/0	3/0	3/0
200	3	2	1	1/0	2/0	3/0	4/0	4/0
250	2	1	1/0	2/0	3/0	4/0	2-2/0	2-2/0
300	1	1/0	2/0	3/0	4/0	2-2/0	2-3/0	2-3/0
350	1/0	2/0	3/0	4/0	2-2/0	2-3/0	2-3/0	2-4/0
400	1/0	2/0	3/0	4/0	2-2/0	2-3/0	2-4/0	2-4/0
500	2/0	3/0	4/0	2-2/0	2-3/0	2-4/0	3-3/0	3-3/0
600	3/0	4/0	2-2/0	2-3/0	2-4/0	3-3/0	3-4/0	3-4/0
700	4/0	2-2/0	2-3/0	2-4/0	3-3/0	3-4/0	3-4/0	4-4/0
800	4/0	2-2/0	2-3/0	2-4/0	3-4/0	3-4/0	4-4/0	4-4/0
900	2-2/0	2-3/0	2-4/0	3-3/0	3-4/0	4-4/0	4-4/0	
1000	2-2/0	2-3/0	2-4/0	3-3/0	4-3/0	4-4/0		
1250	2-3/0	2-4/0	3-3/0	4-3/0	4-4/0			

*Weld cable size (AWG) is based on either a 4 volts or less drop or a current density of at least 300 circular mils per ampere. Contact your distributor for the mm^2 equivalent weld cable sizes.

S-0007-E

2-9. Selecting AC or DC Output

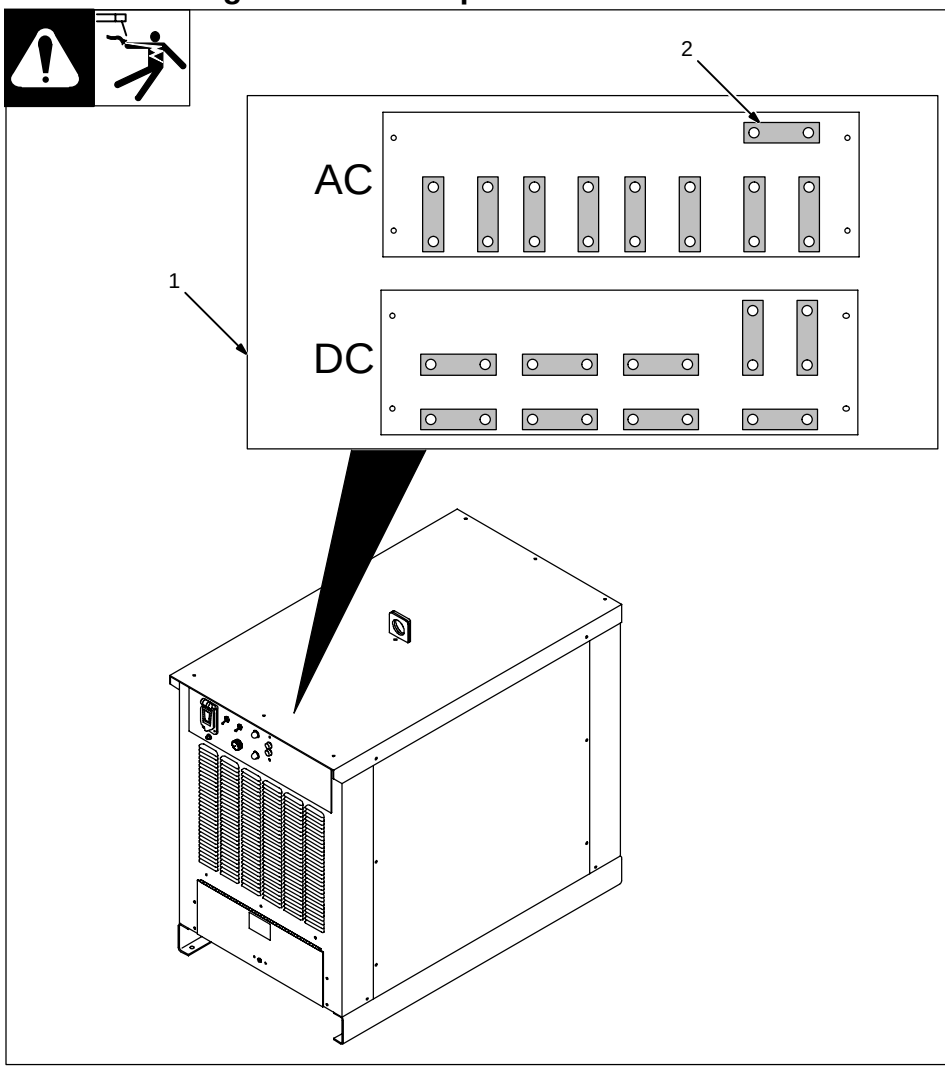

▲ **Turn Off welding power source and disconnect input power before relinking unit.**

Remove top of unit.

1 AC/DC Output Selection Label (Located Inside Unit)

2 Jumper Links

Locate terminal board inside unit. Install jumper links for desired output as shown on label.

☞ *Securing nuts must be removed to change the position of the three jumper links at the right of the terminal board. To change the position of the remaining six jumper links, loosen the securing nuts only to allow the slotted jumper links to be moved. Always securely retighten nuts after links are moved.*

Reinstall top of unit.

▲ **See Safety Rules at beginning of manual for special ac concerns.**

Tools Needed:

3/8, 11/16, 7/8 in

ST-801 881-A / Ref. S-185 482

2-10. Terminal Strip TE3 and Remote 14 Receptacle RC7 Information

	Socket on RC7	Terminal on TE3	Information
24 VOLTS AC OUTPUT (CONTACTOR)	A	A	24 volts, 12 amperes, 60 Hz ac. Protected by circuit breaker CB2.
	B	B	Contact closure to A completes 24 volts ac contactor control circuit.
REMOTE OUTPUT CONTROL	C	C	Command reference; +10 volts dc.
	D	D	Remote control circuit common.
	E	E	0 to +10 volts dc input command signal from remote control.
115 VOLTS AC OUTPUT (CONTACTOR)	I	I	115 volts, 12 amperes, 60 Hz ac. Protected by circuit breaker CB1.
	J	J	Contact closure to I completes 115 volts ac contactor control circuit.
GND	K	K	Chassis common.
	G	G	Circuit common for 24, 42 and 115 volts ac circuits.
42 VOLTS AC	*	L	42 volts, 12 amperes, 60 Hz ac. Protected by circuit breaker CB3.
A/V AMPERAGE VOLTAGE	F	*	Current feedback; +1 volt dc per 100 amperes.
	H	*	Voltage feedback; +1 volt dc per 10 output terminal volts.
REMOTE VOLTAGE SENSING	*	N	Voltage sensing signal from Work weld output terminal.
	*	P	Voltage sensing signal from Electrode weld output terminal.

* Not Used

2-11. Connecting Remote Control

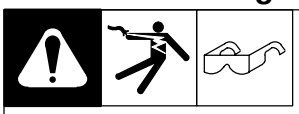

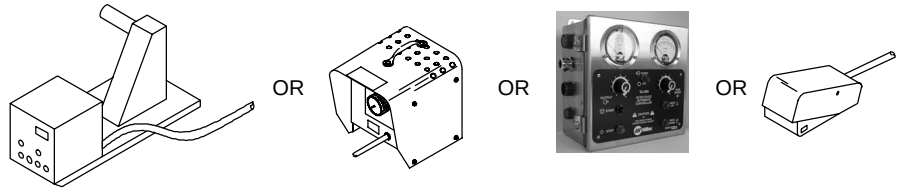

▲ **Turn Off welding power source and disconnect input power before opening access door.**

1 Access Door

2 Remote 14 Receptacle (Mounted Inside Access Area)

Connect remote control to Remote 14 receptacle. If plug does not fit, wire cord to terminal strip TE3 (see Section 2-10 for terminal information).

3 Terminal Strip TE3 (Mounted Inside Access Area)

4 Lead Being Connected To TE3

5 Securing Screw

Strip 3/8 in (10 mm) insulation off end of lead, insert end into proper location on TE3, and tighten applicable securing screw.

Close and secure access door.

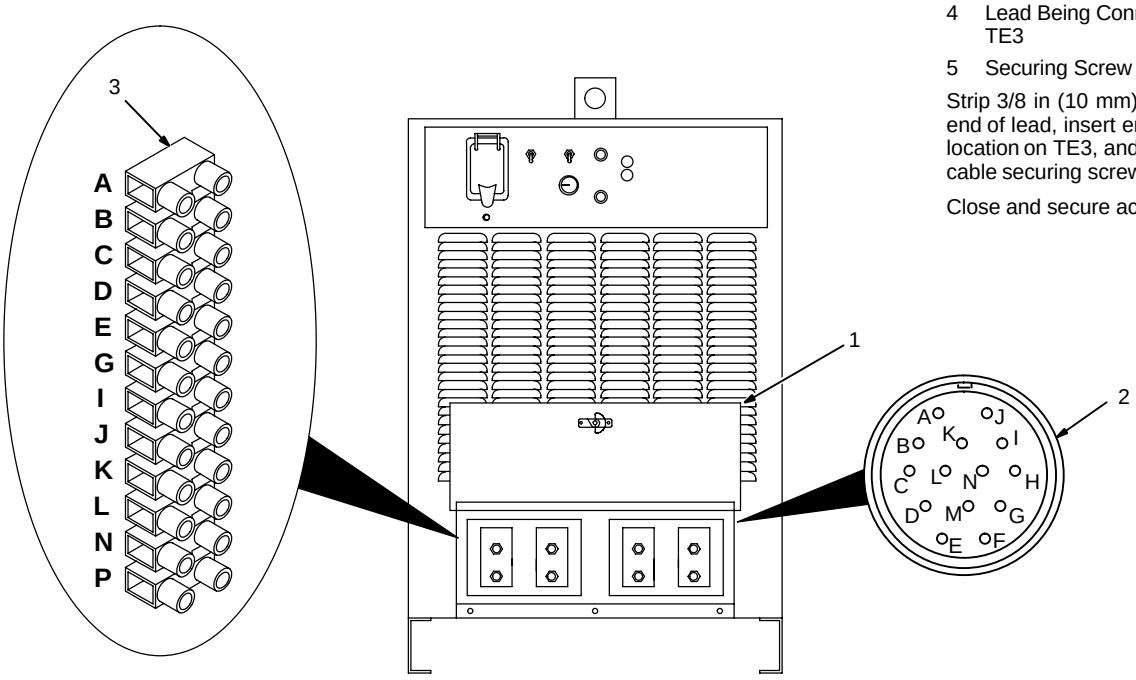

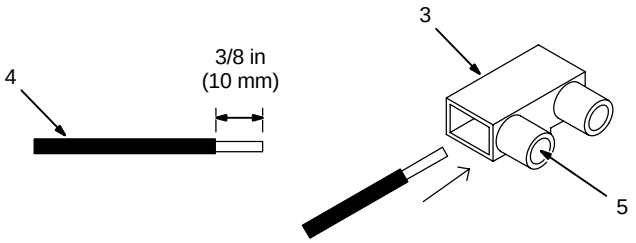

Tools Needed:

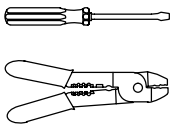

Ref. ST-049 258-C / ST-801 882-A

2-12. 115 Volts AC Receptacle And Circuit Breaker (460 And 575 Volt Input Models)

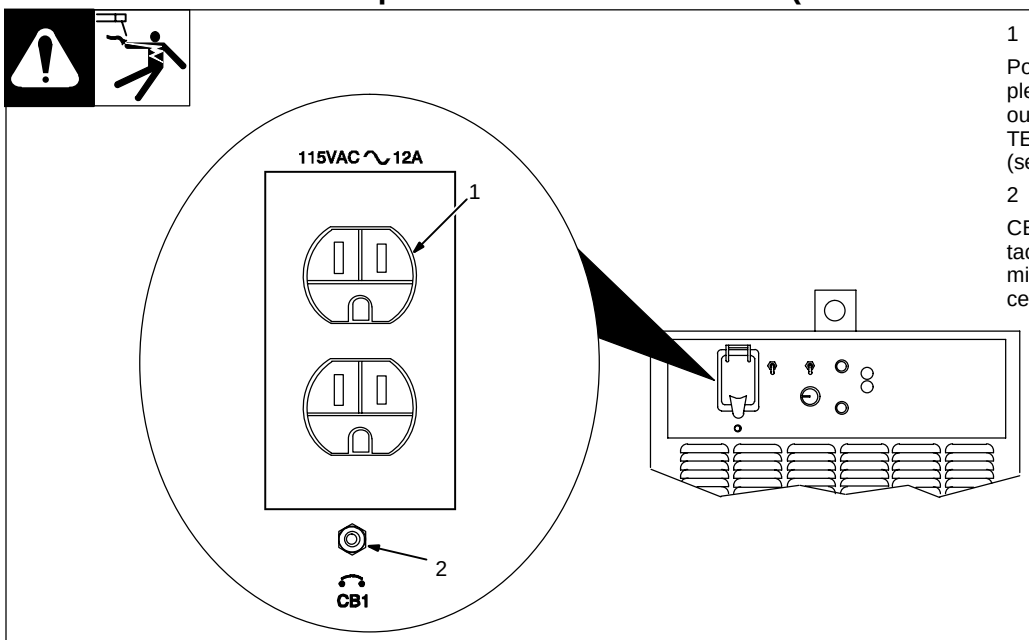

1 115 V 12 A AC Receptacle

Power is shared between the duplex receptacle and the 115 volt output connections at terminal strip TE3 and the Remote 14 receptacle (see Section 2-10).

2 Circuit Breaker CB1

CB1 protects 115 volts ac receptacle and 115 volts ac portion of terminal strip TE3 and Remote 14 receptacle from overload.

Ref. ST-175 086 / Ref. ST-801 882-B

2-13. 230 Volts AC Receptacle And Circuit Breakers (400 Volt Input Models)

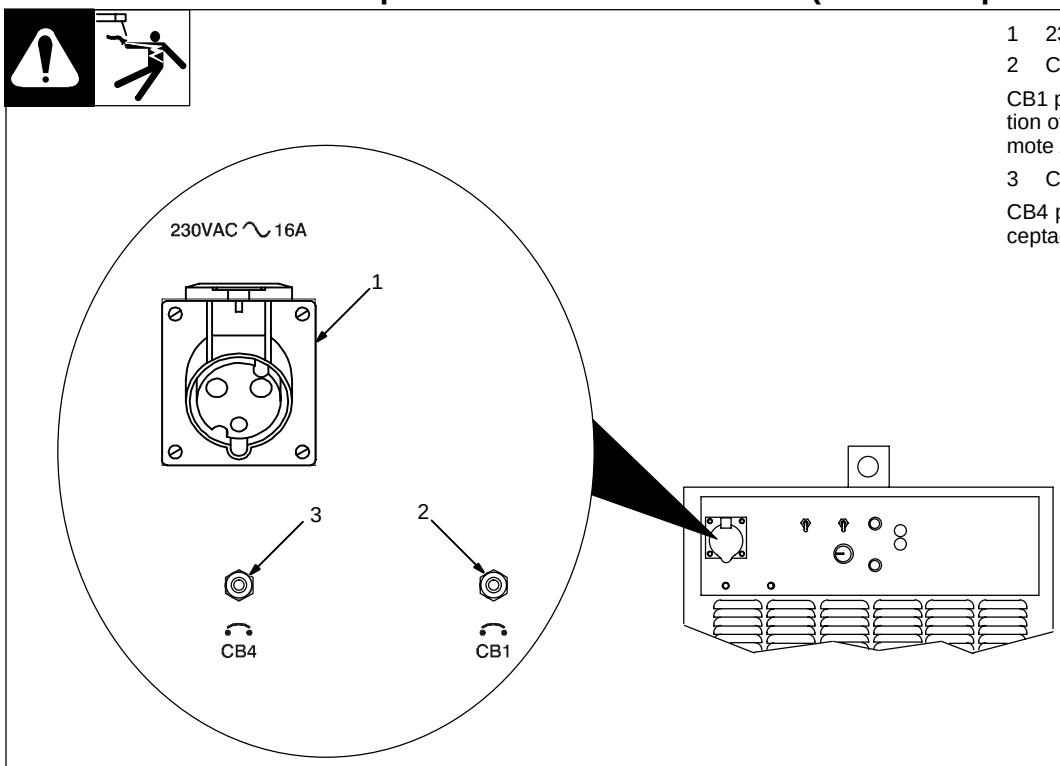

1 230 V 16 A AC Receptacle

2 Circuit Breaker CB1

CB1 protects the 115 volts ac portion of terminal strip TE3 and Remote 14 receptacle from overload.

3 Circuit Breaker CB4

CB4 protects the 230 volts ac receptacle from overload.

Ref. ST-175 086 / Ref. ST-801 882-B

2-14. Electrical Service Guide

	Three-Phase, 50/60 Hz	Three-Phase, 60 Hz	
Input Voltage	380/400/415	460	575
Input Amperes At Rated Output	143	124	100
Max Recommended Standard Fuse Or Circuit Breaker Rating In Amperes	200	175	150
Min Input Conductor Size In AWG/Kcmil	1/0	1	2
Max Recommended Input Conductor Length In Feet (Meters)	382 (116)	417 (127)	575 (175)
Min Grounding Conductor Size In AWG/Kcmil	6	6	6
Reference: 1997 National Electrical Code (NEC).			S-0092-J

2-15. Connecting Input Power

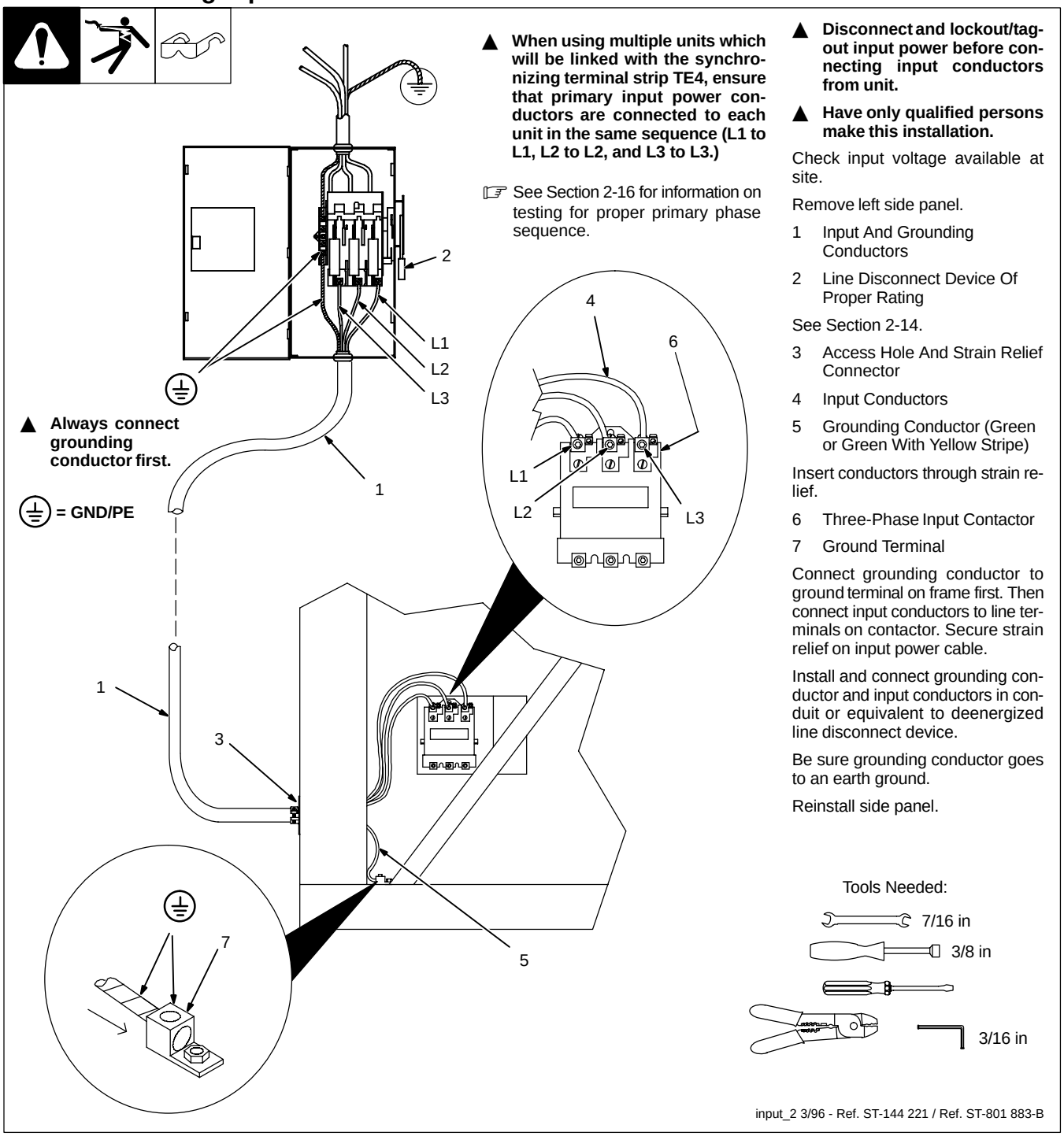

▲ **When using multiple units which will be linked with the synchronizing terminal strip TE4, ensure that primary input power conductors are connected to each unit in the same sequence (L1 to L1, L2 to L2, and L3 to L3.)**

☞ See Section 2-16 for information on testing for proper primary phase sequence.

▲ **Always connect grounding conductor first.**

▲ **Disconnect and lockout/tag-out input power before connecting input conductors from unit.**

▲ **Have only qualified persons make this installation.**

Check input voltage available at site.

Remove left side panel.

1 Input And Grounding Conductors

2 Line Disconnect Device Of Proper Rating

See Section 2-14.

3 Access Hole And Strain Relief Connector

4 Input Conductors

5 Grounding Conductor (Green or Green With Yellow Stripe)

Insert conductors through strain relief.

6 Three-Phase Input Contactor

7 Ground Terminal

Connect grounding conductor to ground terminal on frame first. Then connect input conductors to line terminals on contactor. Secure strain relief on input power cable.

Install and connect grounding conductor and input conductors in conduit or equivalent to deenergized line disconnect device.

Be sure grounding conductor goes to an earth ground.

Reinstall side panel.

Tools Needed:

7/16 in

3/8 in

3/16 in

input_2 3/96 - Ref. ST-144 221 / Ref. ST-801 883-B

2-16. Matching Primary Lines L1, L2, And L3 When Using Multiple Units

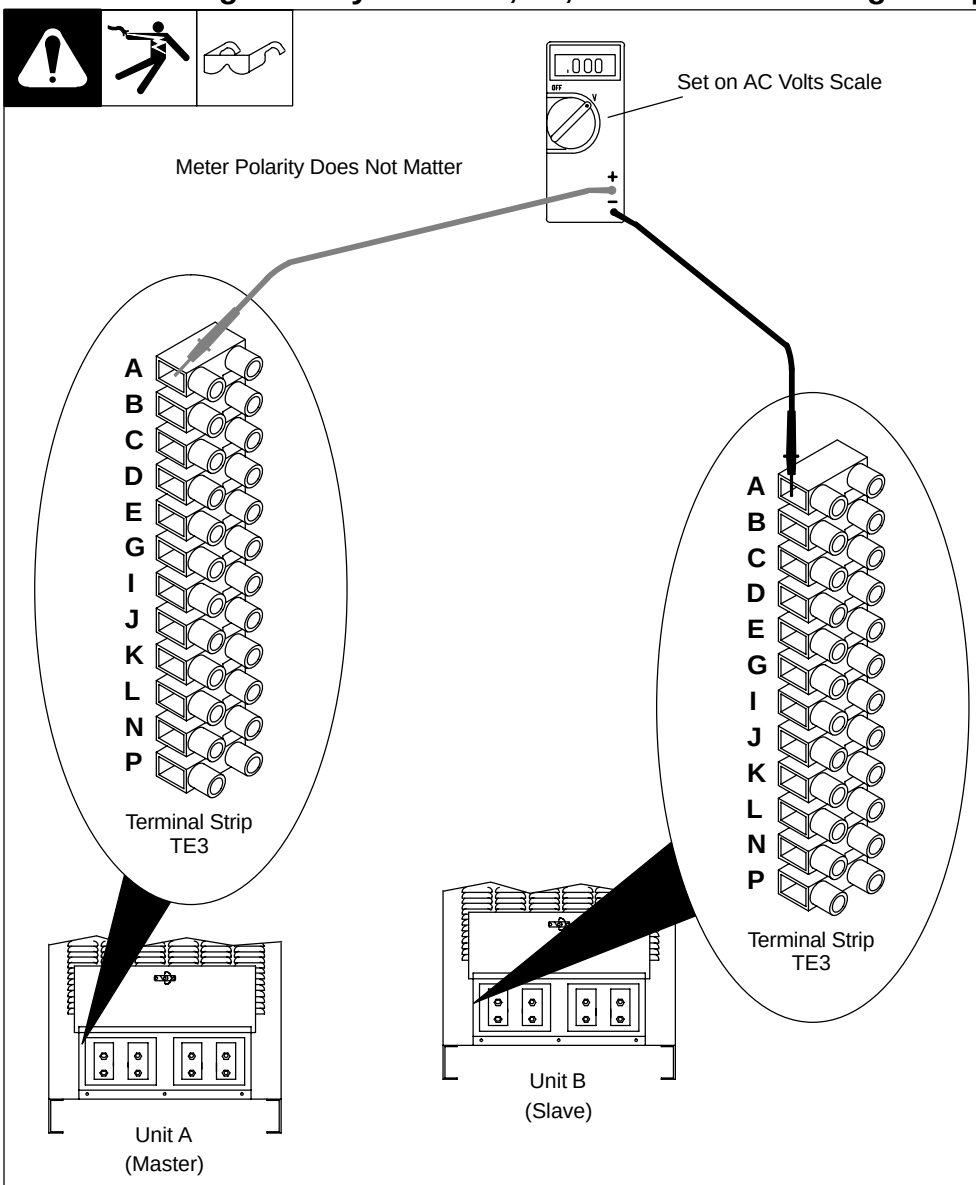

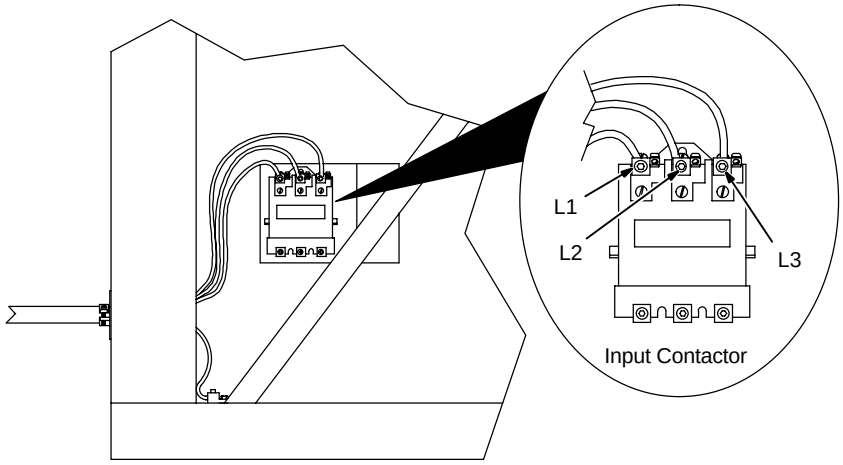

▲ **Turn Off welding power source and disconnect input power before opening access door.**

This test must be performed on the units that will be interconnected using the synchronizing terminal strip TE4. This refers to the multiple unit hook-ups shown in Sections 3-2, 3-3, and 3-5.

Power On both units. Using an ac voltmeter, measure the voltage between terminal A of terminal strip TE3 on both units as shown.

If the measured voltage is 0 (zero) volts, the primary lines are properly phased.

If the measured voltage is 48 volts, swap the input conductor connections to L1 and L3 on the primary input contactor of unit B.

If the measured voltage is 42 volts, swap L1 and L2 on the primary input contactor of unit B. The meter will then read either 48 volts or 24 volts. If the meter reads 48 volts, swap L1 and L3. If the meter reads 24 volts, swap L2 and L3.

If the measured voltage is 24 volts, swap L1 and L2 on the primary input contactor of unit B. The meter will then read either 0 (zero) volts or 42 volts. If the meter reads 0 volts, the primary lines are properly phased. If the meter reads 42 volts, swap L1 and L2 again, and swap L2 and L3.

When the second (slave) unit's primary line phase sequences are matched with the first (master) unit, test primary phasing between third unit (if applicable) and second unit. Always test and correct phasing between following unit and unit previous to it.

Ref. ST-801 882-A / Ref. 801 883-B

SECTION 3 – MAKING WELD OUTPUT CONNECTIONS

3-1. Work And Electrode Cable Connections For Single DC or AC Arcs

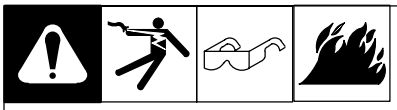

▲ **If there are any questions regarding this procedure, contact the factory before connecting units.**

▲ **ELECTRIC SHOCK can kill.**

Do not touch live electrical parts.

Turn off welding power sources and disconnect input power before making any weld output connections.

See ANSI Z49.1 and OSHA Title 29, Chapter XVII, Part 1910, Subpart Q (addresses at beginning of manual).

Do not handle or come in contact with two live electrodes at the same time.

▲ **UNDERSIZED WELD CABLES can cause fire.**

Work cable or electrode cable must be able to carry the weld output of the individual welding power source (see Section 2-8).

Do not exceed duty cycle of welding power sources.

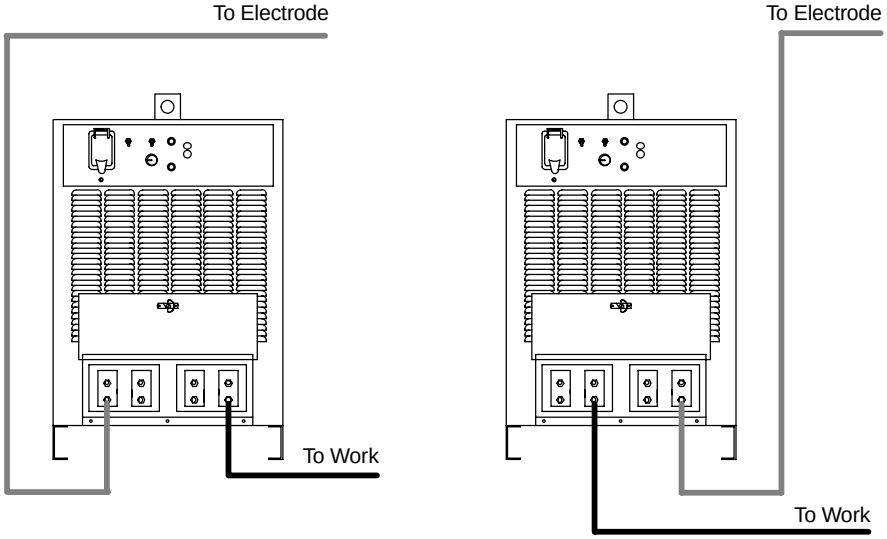

Connections For
DC Electrode Positive
Or AC Output

Connections For
DC Electrode
Negative Output

▲ **Turn Off welding power source and disconnect input power before opening access door.**

For dc electrode positive:

Connect the proper size and number of weld output cables (see Section 2-8) to one of the welding power source electrode terminals.

Connect the proper size and number of ground cables to one of the welding power source work terminals.

For dc electrode negative:

Connect the proper size and number of weld output cables (see Section 2-8) to one of the welding power source work terminals.

Connect the proper size and number of ground cables to one of the welding power source electrode terminals.

For ac output:

Connect the proper size and number of weld output cables (see Section 2-8) to one of the welding power source electrode terminals.

Connect the proper size and number of ground cables to one of the welding power source work terminals.

▲ **High weld output current hazard! Remove all metal jewelry, such as rings and watches, and be careful with tools near output terminals. High current can cause severe burns from hot metal if touched to output terminals and unit is On. ALWAYS turn Off welding power sources and disconnect input power BEFORE making weld output connections.**

ST-801 882-A

3-2. Using Multiple Units: DC Lead Arc, One or More AC Trailing Arcs With Separate Electrodes

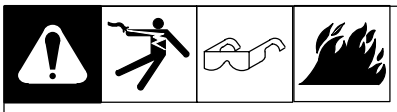

▲ **If there are any questions regarding this procedure, contact the factory before connecting units.**

▲ **ELECTRIC SHOCK can kill.**

Do not touch live electrical parts.

Turn off welding power sources and disconnect input power before making any weld output connections.

See ANSI Z49.1 and OSHA Title 29, Chapter XVII, Part 1910, Subpart Q (addresses at beginning of manual).

Do not handle or come in contact with two live electrodes at the same time.

▲ **UNDERSIZED WELD CABLES can cause fire.**

Work cable or electrode cable must be able to carry the weld output of the individual welding power source (see Section 2-8).

Securely cover common connections with proper insulating material as shown in detail below.

Do not exceed duty cycle of welding power sources.

▲ **Turn Off welding power source and disconnect input power before opening access door.**

To use a dc electrode positive lead arc with one or more trailing ac arcs, make connections as shown.

When running more than one ac trailing arc, set up the ac units according to Section 3-6 or 3-7, as applicable.

▲ **When using multiple arcs in parallel, be sure to follow unit setup instructions carefully. Severe damage to units may occur if units are not correctly connected for parallel operation.**

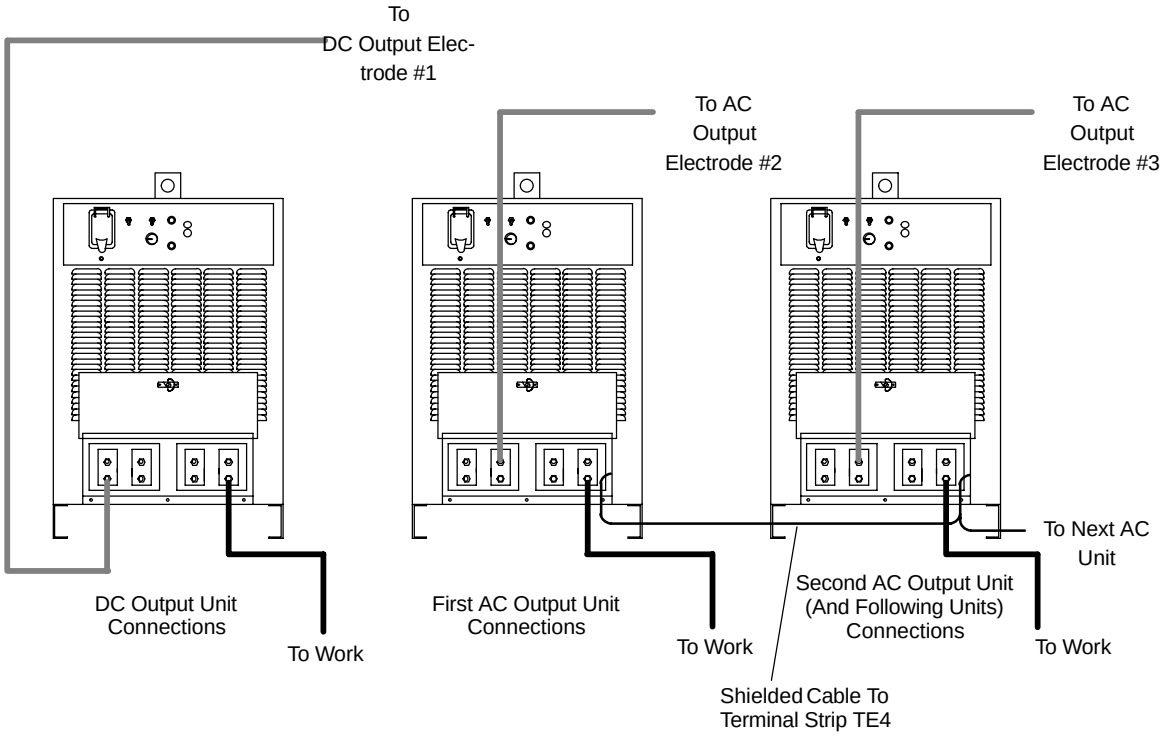

▲ **High weld output current hazard! Remove all metal jewelry, such as rings and watches, and be careful with tools near output terminals. High current can cause severe burns from hot metal if touched to output terminals and unit is On. ALWAYS turn Off welding power sources and disconnect input power BEFORE making weld output connections.**

ST-801 882-A

3-3. Using Multiple Units: Two or More AC Arcs With Separate Electrodes

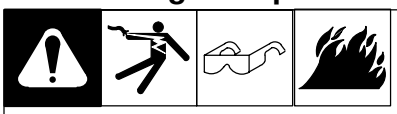

▲ **If there are any questions regarding this procedure, contact the factory before connecting units.**

▲ **ELECTRIC SHOCK can kill.**

Do not touch live electrical parts.

Turn off welding power sources and disconnect input power before making any weld output connections.

See ANSI Z49.1 and OSHA Title 29, Chapter XVII, Part 1910, Subpart Q (addresses at beginning of manual).

Do not handle or come in contact with two live electrodes at the same time.

▲ **UNDERSIZED WELD CABLES can cause fire.**

Work cable or electrode cable must be able to carry the weld output of the individual welding power source (see Section 2-8).

Securely cover common connections with proper insulating material as shown in detail below.

Do not exceed duty cycle of welding power sources.

▲ **Turn Off welding power source and disconnect input power before opening access door.**

To use two or more ac arcs with separate electrodes, make connections as shown.

Set up ac output units according to Section 3-6 or 3-7, as applicable.

▲ **When using multiple arcs in parallel, be sure to follow unit setup instructions carefully. Severe damage to units may occur if units are not correctly connected for parallel operation.**

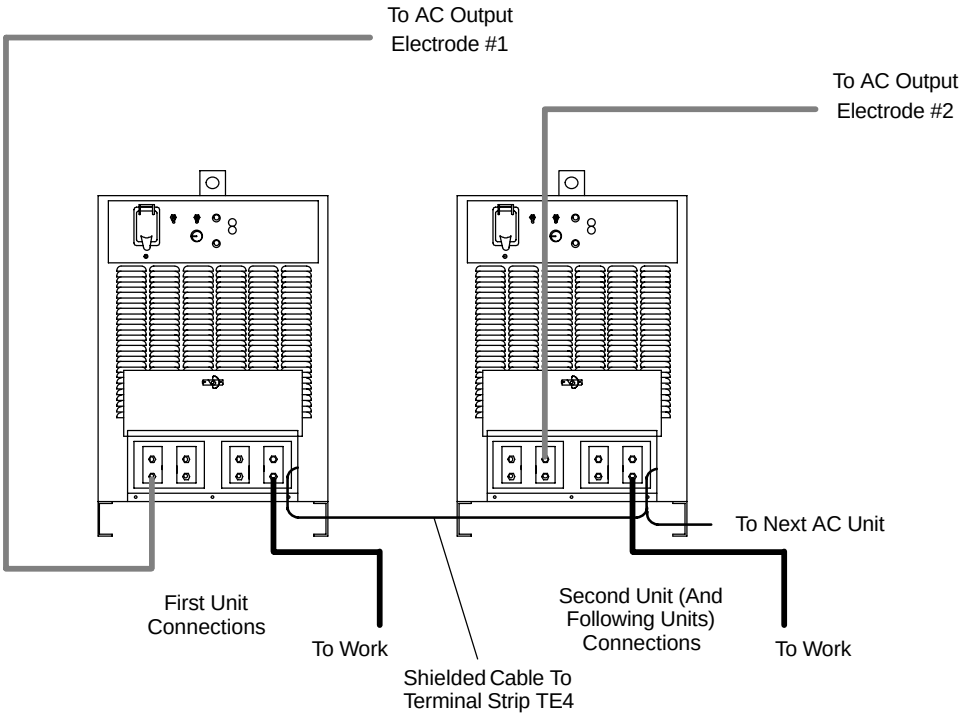

▲ **High weld output current hazard! Remove all metal jewelry, such as rings and watches, and be careful with tools near output terminals. High current can cause severe burns from hot metal if touched to output terminals and unit is On. ALWAYS turn Off welding power sources and disconnect input power BEFORE making weld output connections.**

ST-801 882-A

3-4. Using Multiple Units: Parallel DC Output Connections

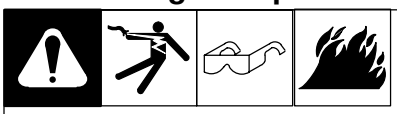

▲ **If there are any questions regarding this procedure, contact the factory before connecting units.**

▲ **ELECTRIC SHOCK can kill.**

Do not touch live electrical parts.

Turn off welding power sources and disconnect input power before making any weld output connections.

See ANSI Z49.1 and OSHA Title 29, Chapter XVII, Part 1910, Subpart Q (addresses at beginning of manual).

Do not handle or come in contact with two live electrodes at the same time.

▲ **UNDERSIZED WELD CABLES can cause fire.**

Use separate cables from each welding power source. The work or electrode cable from each welding power source must be able to carry the output of the individual welding power source (see Section 2-8).

Do not exceed duty cycle of welding power sources.

☞ *Set Amperage/Voltage Adjustment controls on all paralleled units for the same output.*

▲ **Turn Off welding power source and disconnect input power before opening access door.**

To use multiple units in parallel, make connections as shown.

All units must be set up for dc output according to Section 2-9. Do not parallel dc output units with ac output units.

☞ *When connecting two or more units in parallel, do not use more than one unit in CV mode. All units can be operated in CC mode if a voltage-sensing wire feed system is used. If constant voltage output is required, operate only one unit in the CV mode and put the remaining units in the CC mode with their output set to a percentage of total welding output divided by the total number of units used.*

▲ **When using multiple arcs in parallel, be sure to follow unit setup instructions carefully. Severe damage to units may occur if units are not correctly connected for parallel operation.**

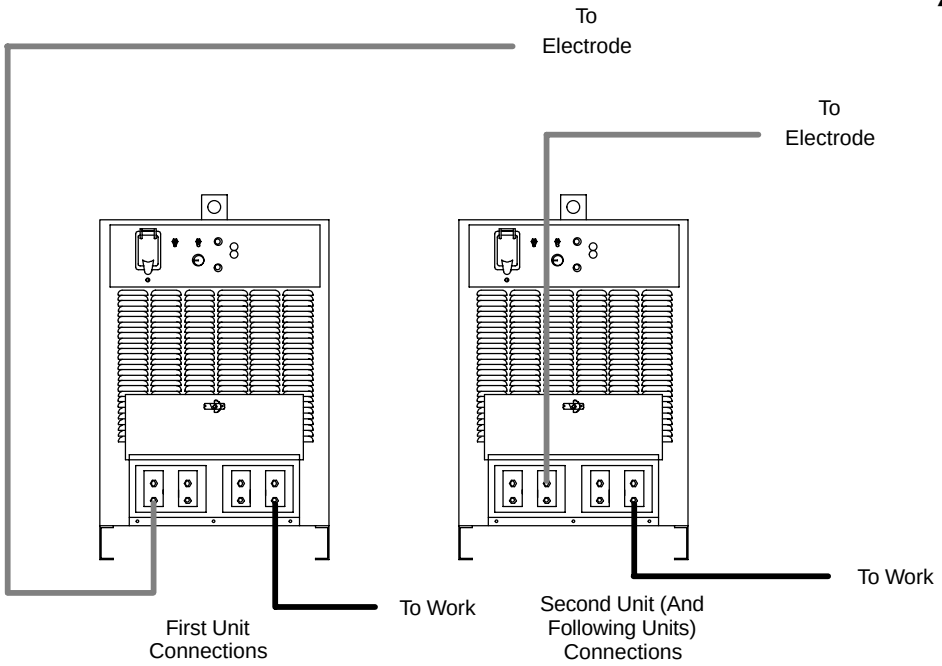

▲ **High weld output current hazard! Remove all metal jewelry, such as rings and watches, and be careful with tools near output terminals. High current can cause severe burns from hot metal if touched to output terminals and unit is On. ALWAYS turn Off welding power sources and disconnect input power BEFORE making weld output connections.**

ST-801 882-A

3-5. Using Multiple Units: Parallel AC Output Connections

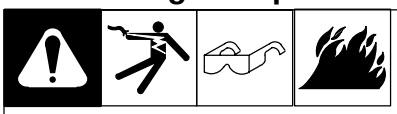

▲ **If there are any questions regarding this procedure, contact the factory before connecting units.**

▲ **ELECTRIC SHOCK can kill.**

Do not touch live electrical parts.

Turn off welding power sources and disconnect input power before making any weld output connections.

See ANSI Z49.1 and OSHA Title 29, Chapter XVII, Part 1910, Subpart Q (addresses at beginning of manual).

Do not handle or come in contact with two live electrodes at the same time.

▲ **UNDERSIZED WELD CABLES can cause fire.**

Use separate cables from each welding power source. The work or electrode cable from each welding power source must be able to carry the output of the individual welding power source (see Section 2-8).

Do not exceed duty cycle of welding power sources.

☞ *Set Amperage/Voltage Adjustment controls on all paralleled units for the same output.*

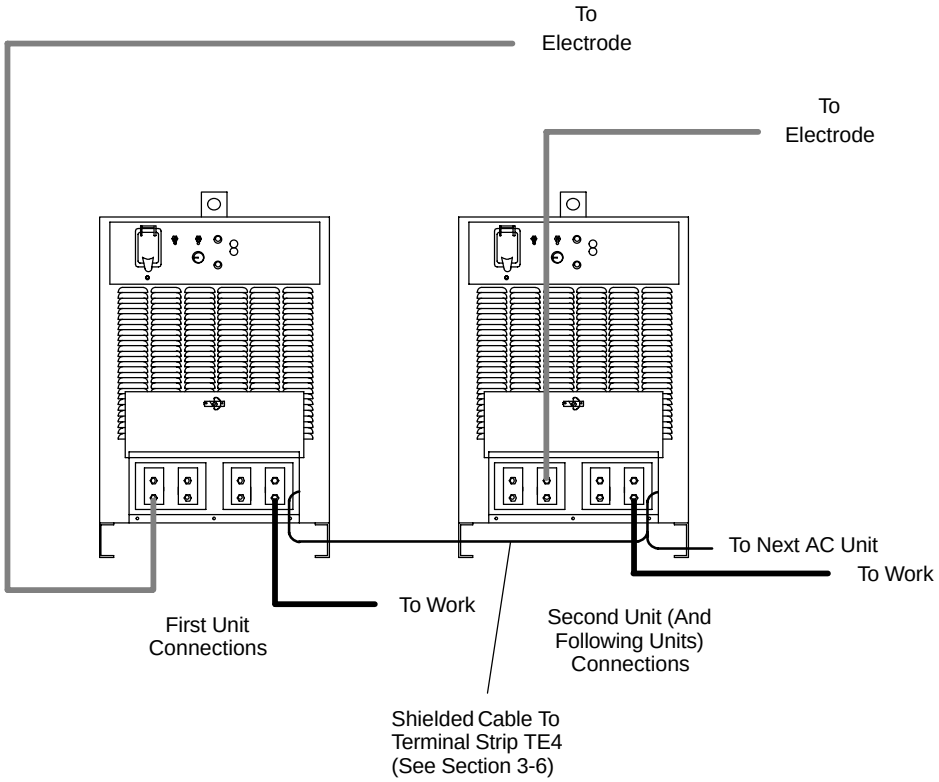

▲ **High weld output current hazard! Remove all metal jewelry, such as rings and watches, and be careful with tools near output terminals. High current can cause severe burns from hot metal if touched to output terminals and unit is On. ALWAYS turn Off welding power sources and disconnect input power BEFORE making weld output connections.**

▲ **Turn Off welding power source and disconnect input power before opening access door.**

▲ **Always test for correct phasing before paralleling ac outputs according to Section 3-9.**

To use multiple units in parallel, make connections as shown.

All units must be set up for ac output according to Section 2-9. Do not parallel dc output units with ac output units.

The welding power source outputs must be synchronized according to Section 3-6.

☞ When connecting two or more units in parallel, do not use more than one unit in CV mode. All units can be operated in CC mode if a voltage-sensing wire feed system is used. If constant voltage output is required, operate only one unit in the CV mode and put the remaining units in the CC mode with their output set to a percentage of total welding output divided by the total number of units used.

▲ **When using multiple arcs in parallel, be sure to follow unit setup instructions carefully. Severe damage to units may occur if units are not correctly connected for parallel operation.**

ST-801 882-A

3-6. Synchronizing Outputs For Parallel AC Arcs

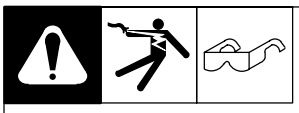

▲ **If there are any questions regarding this procedure, contact the factory before connecting units.**

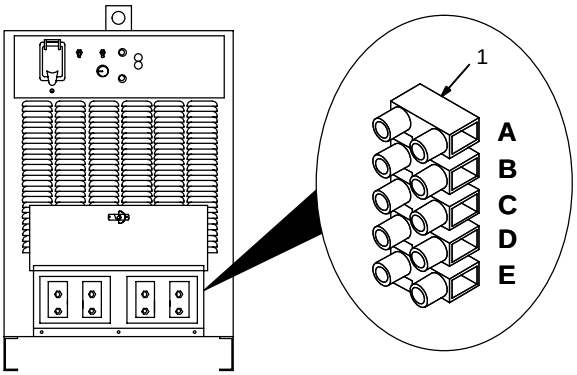

▲ **All synchronized units must be set up for ac output according to Section 2-9. Do not mix dc and ac output units.**

☞ *Use two-conductor (12 to 20 gauge), with uninsulated ground, shielded cable to make TE4 connections. Connect ground to terminal C on TE4.*

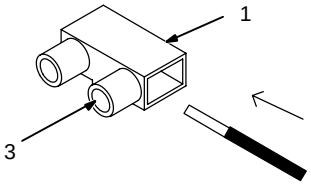

▲ **Turn Off welding power source and disconnect input power before opening access door.**

1 Terminal Strip TE4

This procedure allows the ac outputs of two or more units to be synchronized so the waveforms match. To synchronize outputs, make connections between terminal strip TE4 on each ac output unit as shown in illustration.

☞ *Do not disturb factory connections to terminal strip TE4.*

▲ **Ensure that primary input power conductors are connected to each unit in the same sequence (L1 to L1, L2 to L2, and L3 to L3). See Section 2-15 for information on connecting input power. See Section 2-16 for information on testing for proper primary phase sequence.**

▲ **Always test for correct phasing before paralleling ac outputs according to Section 3-9.**

2 Lead Being Connected To TE4

3 Securing Screw

Strip 3/8 in (10 mm) insulation off end of lead, insert end into proper location on TE4, and tighten applicable securing screw.

Close and secure access door.

☞ *Make certain control board PC1 is set for synchronized parallel ac arcs (see Section 3-8).*

Connections from first to second welding power source:
terminal A to terminal E,
terminal B to terminal B,
terminal C to terminal C

Connections from second to third welding power source:
terminal A to terminal E,
terminal B to terminal B,
terminal C to terminal C

Connections from third to fourth welding power source:
terminal A to terminal E,
terminal B to terminal B,
terminal C to terminal C

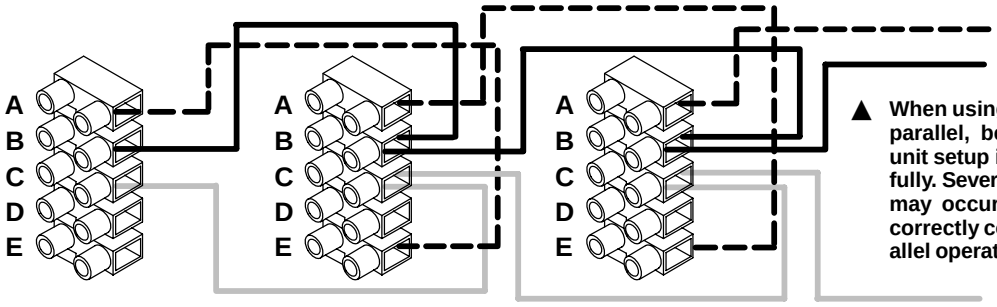

▲ **When using multiple arcs in parallel, be sure to follow unit setup instructions carefully. Severe damage to units may occur if units are not correctly connected for parallel operation.**

TE4 on first welding power source

TE4 on second welding power source

TE4 on third welding power source

Repeat same connection sequence on following welding power sources

Terminal Strip TE4 Connections For Operating Multiple AC Units In Parallel

Tools Needed:

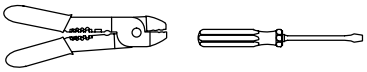

ST-801 882-A

3-7. Using Non-Parallel AC Arcs Terminal Strip TE4 Connections

▲ **If there are any questions regarding this procedure, contact the factory before connecting units.**

Tools Needed:

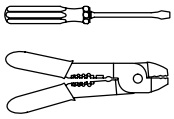

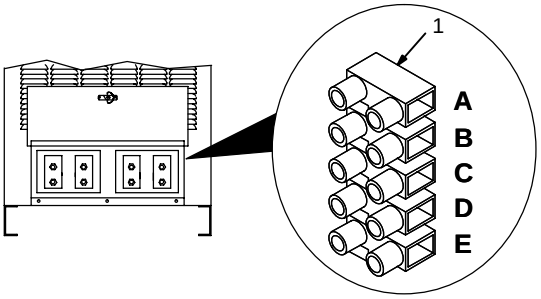

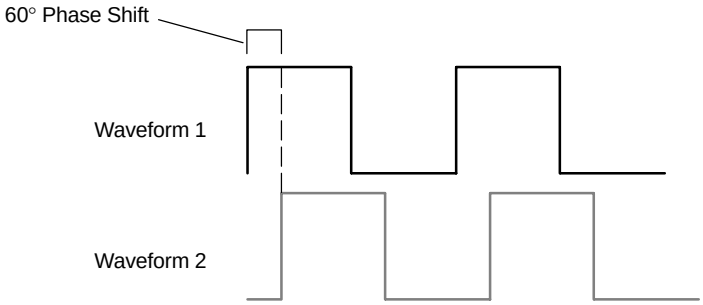

AC Waveforms

☞ *Use two-conductor (12 to 20 gauge), with uninsulated ground, shielded cable to make TE4 connections. Connect ground to terminal C on TE4.*

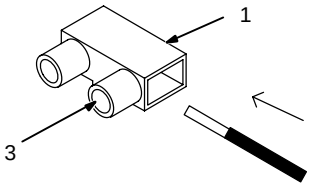

▲ **Turn Off welding power source and disconnect input power before opening access door.**

▲ **All units must be set up for ac output according to Section 2-9. Do not parallel dc output units with ac output units.**

▲ **DC output units do not require synchronization with AC output units.**

1 Terminal Strip TE4

This procedure allows the ac output waveforms of two or more units to have a 60° phase shift. Make connections between terminal strip TE4 on applicable ac output units as shown in illustration.

☞ *Do not disturb factory connections to terminal strip TE4.*

▲ **Ensure that primary input power conductors are connected to each unit in the same sequence (L1 to L1, L2 to L2, and L3 to L3). See Section 2-15 for information on connecting input power. See Section 2-16 for information on testing for proper primary phase sequence.**

2 Lead Being Connected To TE4

3 Securing Screw

Strip 3/8 in (10 mm) insulation off end of lead, insert end into proper location on TE4, and tighten applicable securing screw.

Close and secure access door.

☞ *Connect plug as shown in Section 3-8.*

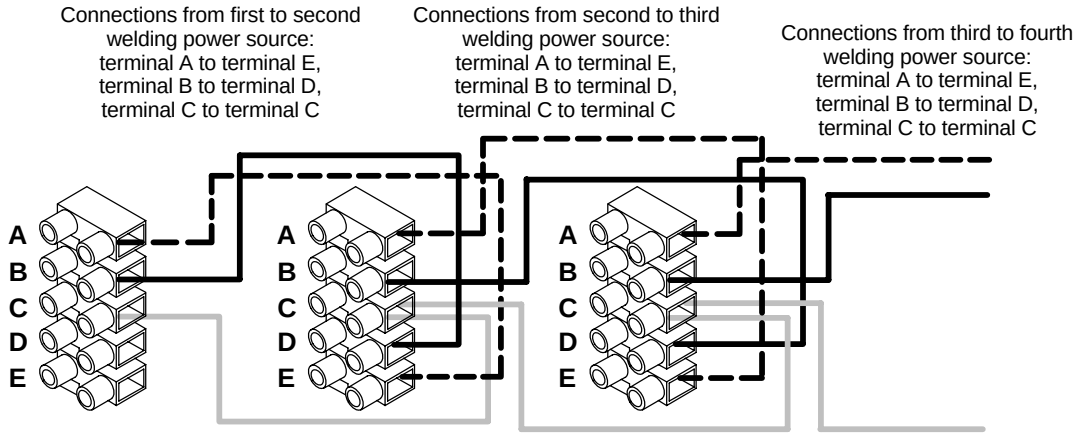

TE4 on first welding power source | **TE4 on second welding power source** | **TE4 on third welding power source** | **Repeat same connection sequence on following welding power sources**

Terminal Strip TE4 Connections For Running Multiple, Non-Parallel AC Arcs

Ref. 801 882-A

3-8. Control Board PC1 Connections For Non-Parallel AC Arcs Or Parallel Synchronized AC Arcs

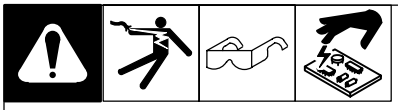

▲ **If there are any questions regarding this procedure, contact the factory before connecting units.**

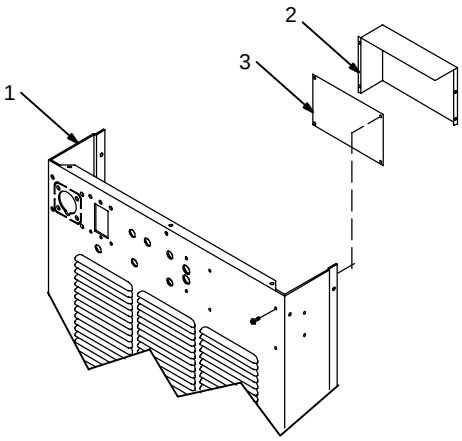

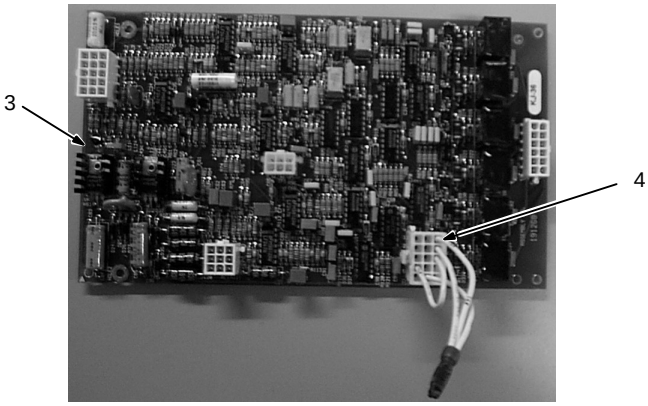

PC1 Viewed From Rear Of Unit

▲ **Turn Off welding power source and disconnect input power before following this procedure.**

Remove top cover.

1 Front Panel

2 Circuit Card Cover

3 Control Board PC1

Locate and remove circuit card cover mounted on upper right inside of front panel. PC1 is mounted on inside of control panel where circuit card cover was removed.

4 Receptacle RC4

PC1 arrives from the factory with a synchronized ac arc (0°) plug.

☞ *With 60 Hz input power, the output of this unit is 10 Hz. With 50 Hz input, the output is 8.33 Hz.*

To operate the unit with ac arcs that have a variable balance shift, disconnect the synchronized ac arc (0°) plug and connect the appropriate supplied variable balance plug.

To resume operation with synchronized ac arcs, disconnect the variable balance plug and connect the synchronized ac arc (0°) plug.

Plugs are labeled accordingly.

☞ *Always keep disconnected plug for future use.*

Reinstall circuit card cover and top cover.

Tools Needed:

3/8 in

Ref. SD-801 982-A

3-9. Testing AC Output Units For Correct Phasing Prior to Parallel Operation

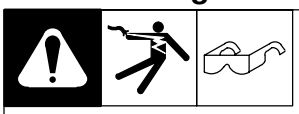

▲ **If there are any questions regarding this procedure, contact the factory before connecting units.**

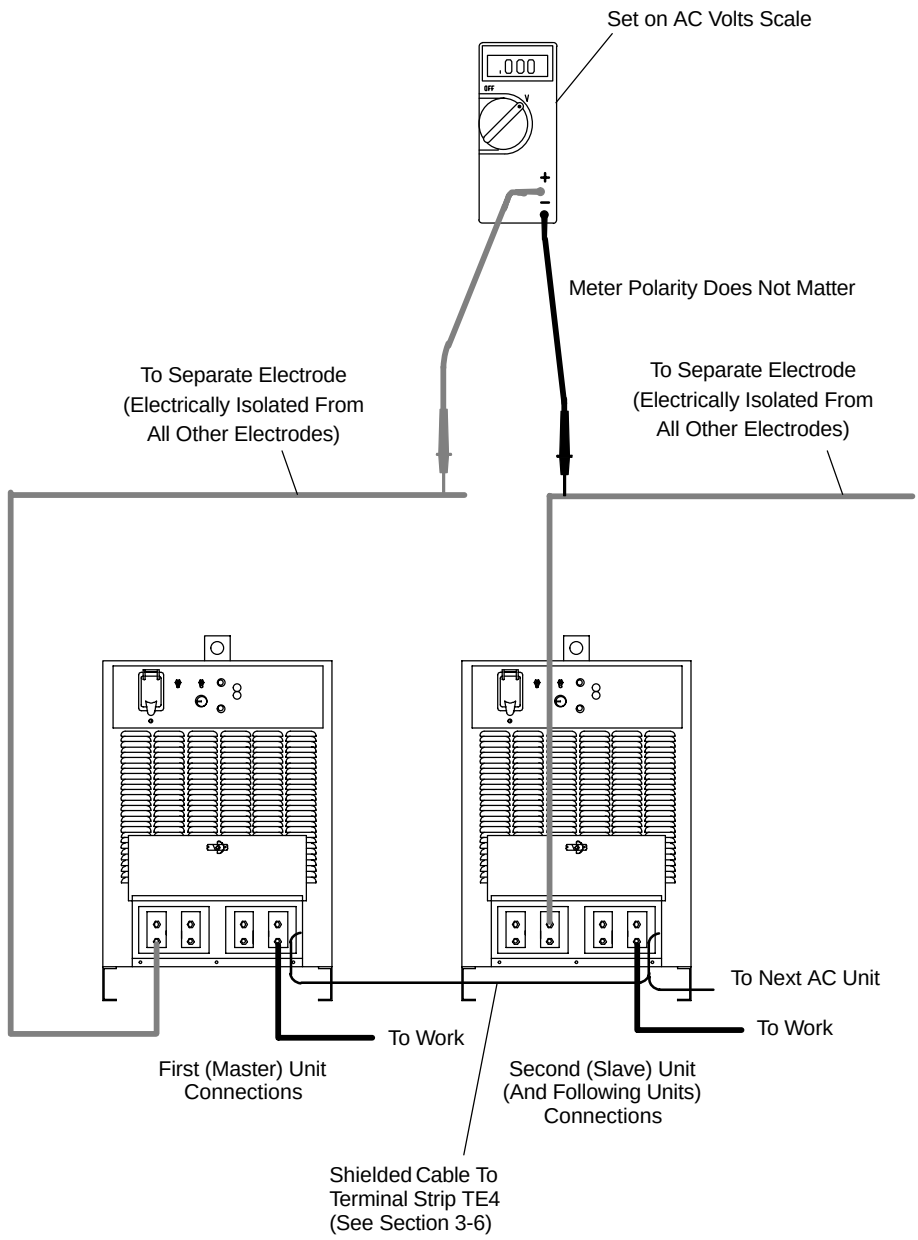

▲ **Turn Off welding power sources and disconnect input power before opening access door.**

▲ **If units are not phased correctly, the welding power sources may be damaged.**

▲ **Open-circuit voltage will be present on all electrodes during this check. If the machines are not phased correctly, the voltage between electrodes may equal two times open-circuit voltage (135 - 145 volts ac). Have only qualified persons do this testing.**

Be sure synchronizing connections in Section 3-6 have been made before performing this procedure. Make connections as shown in illustration. Connect ac voltmeter between electrode connected to first (master) unit and electrode connected to second (slave) unit.

Power On both units and place both output control switches in On position. **When the units are properly phased, the voltmeter will read less than one volt ac.**

If the meter reads more than one volt ac, the unit's primary lines are not matched in the proper phase sequence (see Section 2-16).

After performing the test in Section 2-16, retest the units for phasing. When the second (slave) unit is in phase with the first (master) unit, test phasing between third unit (if applicable) and second unit. Always test and correct phasing between following unit and the unit previous to it (check fourth unit against third unit, fifth unit against fourth unit, etc.).

After setting units up for correct synchronizing, connect units according to section covering desired multiple unit use (see Sections 3-2, 3-3, and 3-5).

ST-801 882-A

4-1. Front Panel Controls (Non-CE Models)

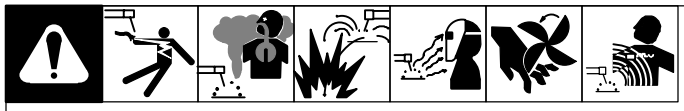

1 Output Control Switch

For weld output, place switch in On position. For remote control of output, make connections to terminal strip TE3 or Remote 14 receptacle (see Section 2-10) and place switch in Remote position.

2 A/V (Amperage/Voltage) Control Switch

For front panel control, place switch in Panel position and use the A/V Adjust control.

▲ **Turn Off power before connecting remote device.**

For remote control, connect remote device to terminal strip TE3 or Remote 14 receptacle, and place switch in Remote position. Remote control provides full range of unit output regardless of A/V Adjust control setting

3 Pilot Light

4 Power Push Button Switch

☞ *The fan motor is thermostatically controlled and only runs when cooling is needed.*

5 High Temperature Shutdown Light

Lights if welding power source overheats.

6 A/V (Amperage/Voltage) Adjustment Control

Use control to select weld voltage or amperage. Control may be adjusted while welding. Numbers on scale are for reference only.

7 CC/CV Switch (Mounted Inside Access Area)

Place switch in desired position.

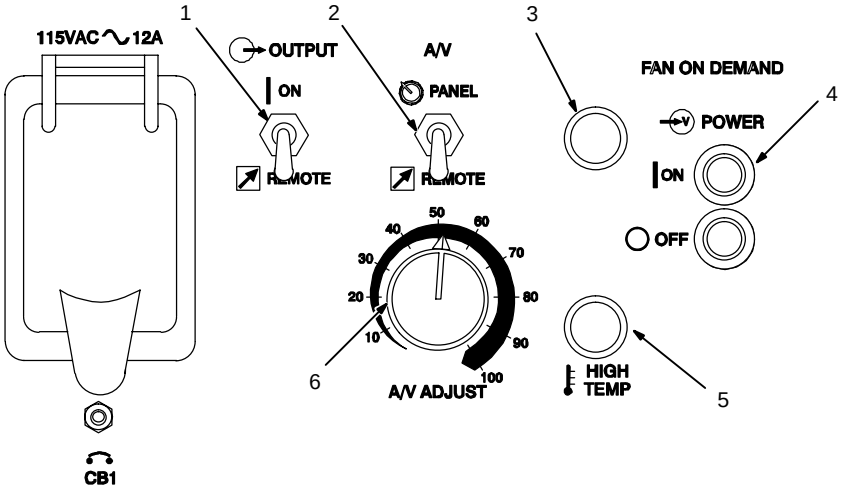

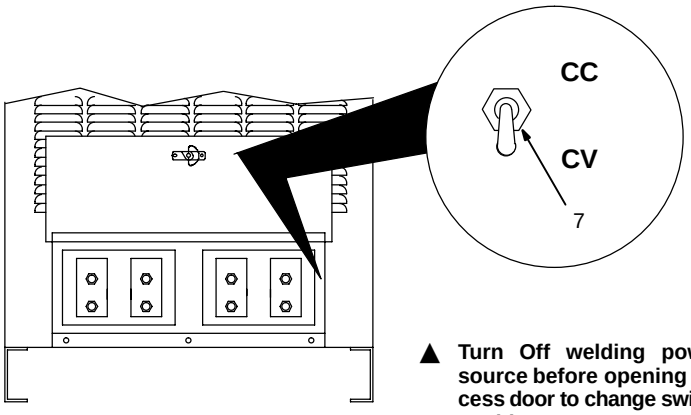

▲ **Turn Off welding power source before opening access door to change switch position.**

Ref. ST-175 086 / Ref. ST-801 882-A

4-2. Front Panel Controls (CE Models)

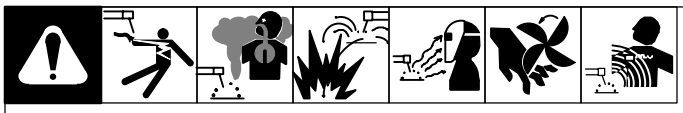

1 Output Control Switch

For weld output, place switch in On position. For remote control of output, make connections to terminal strip TE3 or Remote 14 receptacle (see Section 2-10) and place switch in Remote position.

2 A/V (Amperage/Voltage) Control Switch

For front panel control, place switch in Panel position and use the A/V Adjust control.

▲ **Turn Off power before connecting remote device.**

For remote control, connect remote device to terminal strip TE3 or Remote 14 receptacle, and place switch in Remote position. Remote control provides full range of unit output regardless of A/V Adjust control setting

3 Pilot Light

4 Power Push Button Switch

☞ *The fan motor is thermostatically controlled and only runs when cooling is needed.*

5 High Temperature Shutdown Light

Lights if welding power source overheats.

6 A/V (Amperage/Voltage) Adjustment Control

Use control to select weld voltage or amperage. Control may be adjusted while welding. Numbers on scale are for reference only.

7 CC/CV Switch (Mounted Inside Access Area)

Place switch in desired position.

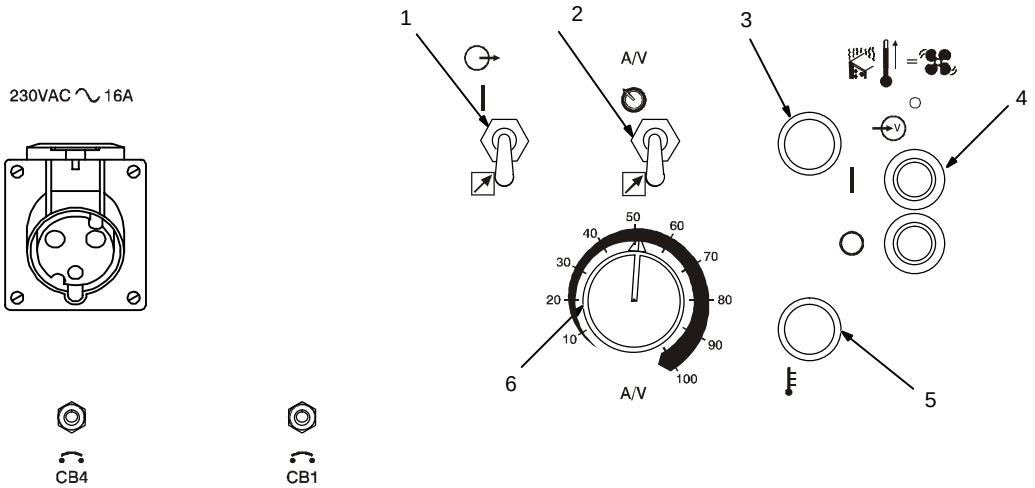

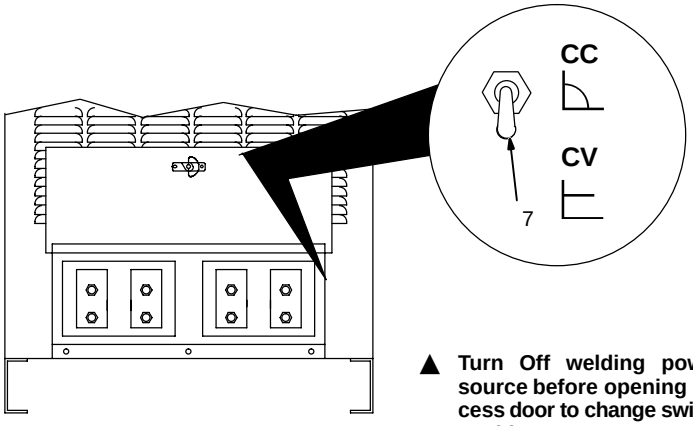

▲ **Turn Off welding power source before opening access door to change switch position.**

Ref. ST-175 086 / Ref. ST-801 882-A

SECTION 5 – MAINTENANCE AND TROUBLESHOOTING

5-1. Routine Maintenance

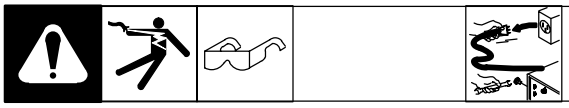

▲ **Disconnect input power before maintaining.**

☞ *Maintain more often during severe conditions.*

3 Months

Replace damaged or unreadable labels.

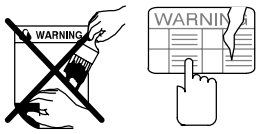

Repair or replace cracked cables.

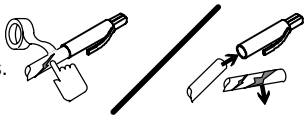

Replace cracked torch body.

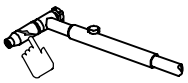

Repair or replace cracked cables and cords.

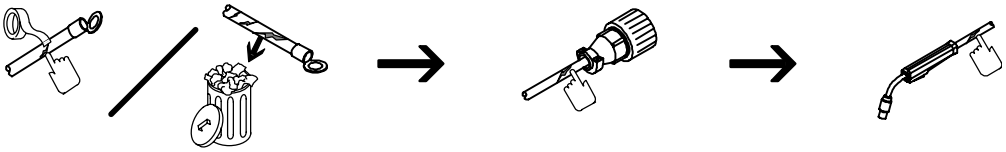

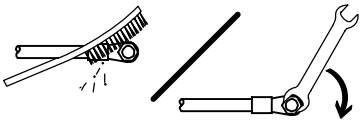

Clean and tighten weld terminals.

6 Months

Blow out inside.

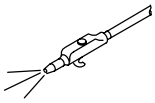

5-2. Fuses F1 And F2

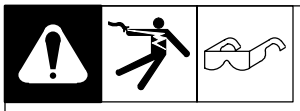

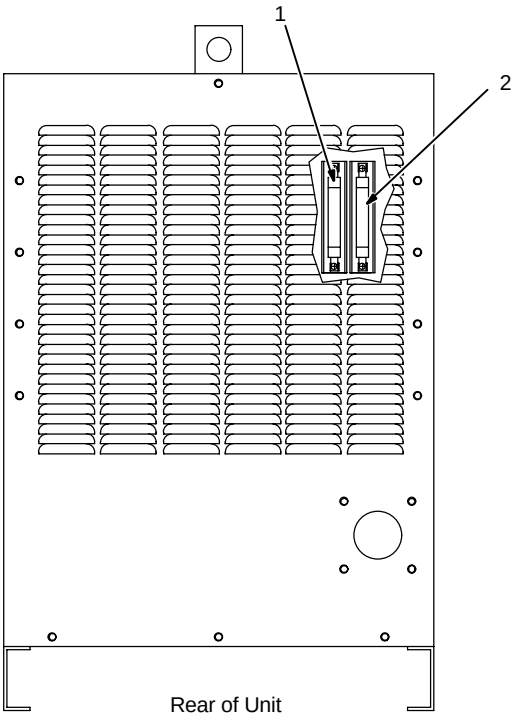

▲ **Turn Off welding power source and disconnect input power before checking fuse.**

Fuses F1 and F2 protect the 115 volt ac winding of transformer T2. If fuse F1 or F2 opens, the welding power source shuts down.

Remove top cover from unit to access fuses.

1 Fuse F1

Check F1 and replace if needed, using a fuse of the same rating.

2 Fuse F2

Check F2 and replace if needed, using a fuse of the same rating.

Use proper tool when removing fuses.

Reinstall top cover.

Tools Needed:

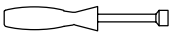

3/8 in

Ref. ST-801 883-B

5-3. Access Area Circuit Breakers

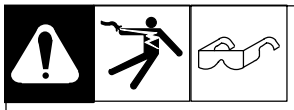

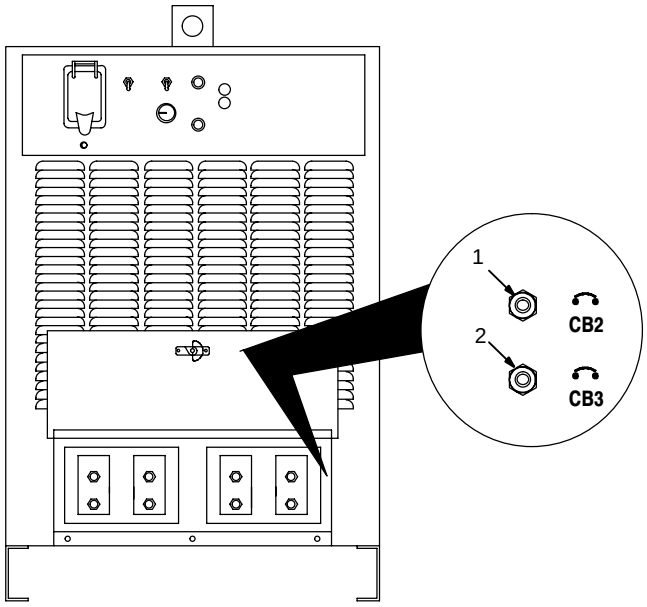

▲ **Turn Off welding power source and disconnect input power before checking circuit breakers.**

1 Circuit Breaker CB2

CB2 protects the 24 VAC portion of terminal strip TE3 and the Remote 14 receptacle.

2 Circuit Breaker CB3

CB3 protects the 42 VAC portion of terminal strip TE3.

Press button to reset breaker.

Ref. ST-175 086 / ST-801 882-A

5-4. Troubleshooting

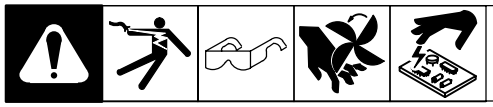

Trouble	Remedy
No weld output; unit completely inoperative.	Place line disconnect switch in On position (see Section 2-15).
	Check fuses F1 and F2 and replace if necessary (see Section 5-2).
	Check and replace line fuse(s), if necessary, or reset circuit breaker (see Section 2-15).
	Check for proper input power connections (see Section 2-15).
No weld output; pilot light On.	Check, repair, or replace remote control.
	Unit overheated. Allow unit to cool with fan On (see Section 2-2).
	Have Factory Authorized Service Agent check control board PC1.
Erratic or improper weld output.	Use proper size and type of weld cable (see Section 2-8).
	Clean and tighten all weld connections.
	When using multiple units, make sure all units connected with terminal strip TE4 are turned on.
	Have Factory Authorized Service Agent check control board PC1.
No 115 volts ac output at duplex receptacle, terminal strip TE3, and Remote 14 receptacle.	Reset circuit breaker CB1 (see Section 2-12).
No 230 volts ac output at duplex receptacle.	Reset circuit breaker CB4 (see Section 2-13).
No 24 volts ac output at terminal strip TE3 and Remote 14 receptacle.	Reset circuit breaker CB2 (see Section 5-3).
No 42 volts ac output at terminal strip TE3.	Reset circuit breaker CB3 (see Section 5-3).

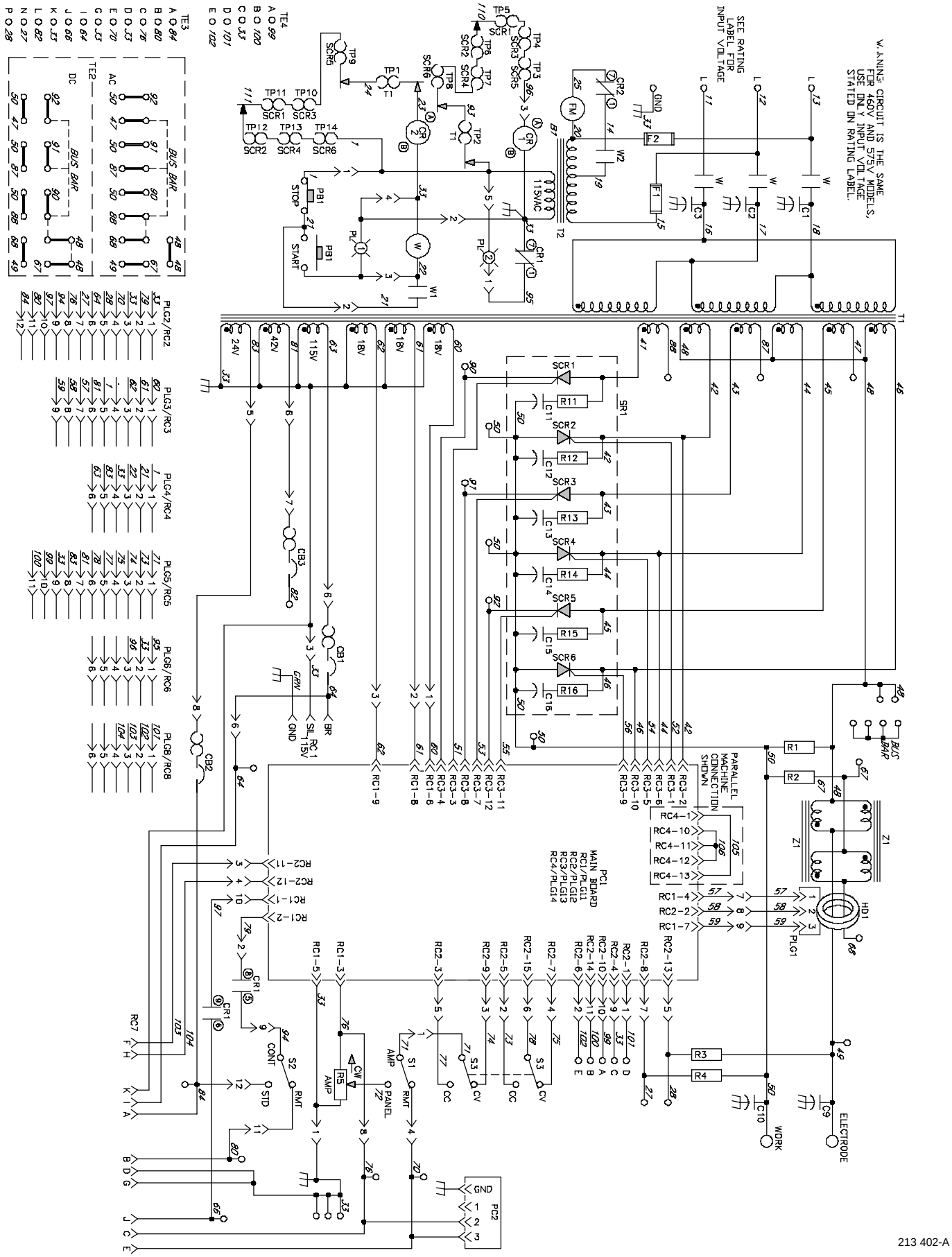

Figure 6-1. Circuit Diagram For 460 And 575 VAC Input Models

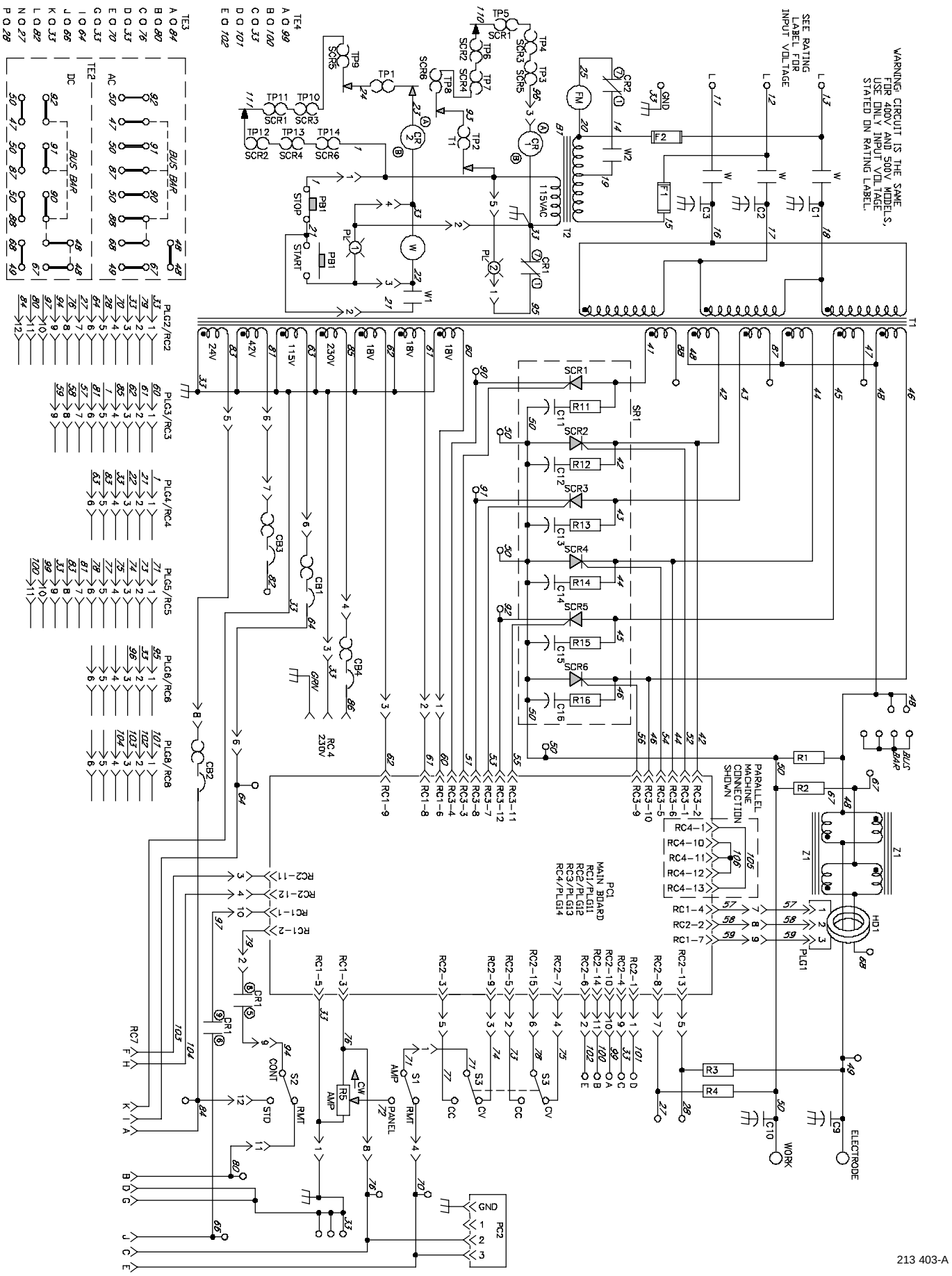

Figure 6-2. Circuit Diagram For 400 VAC Input Models

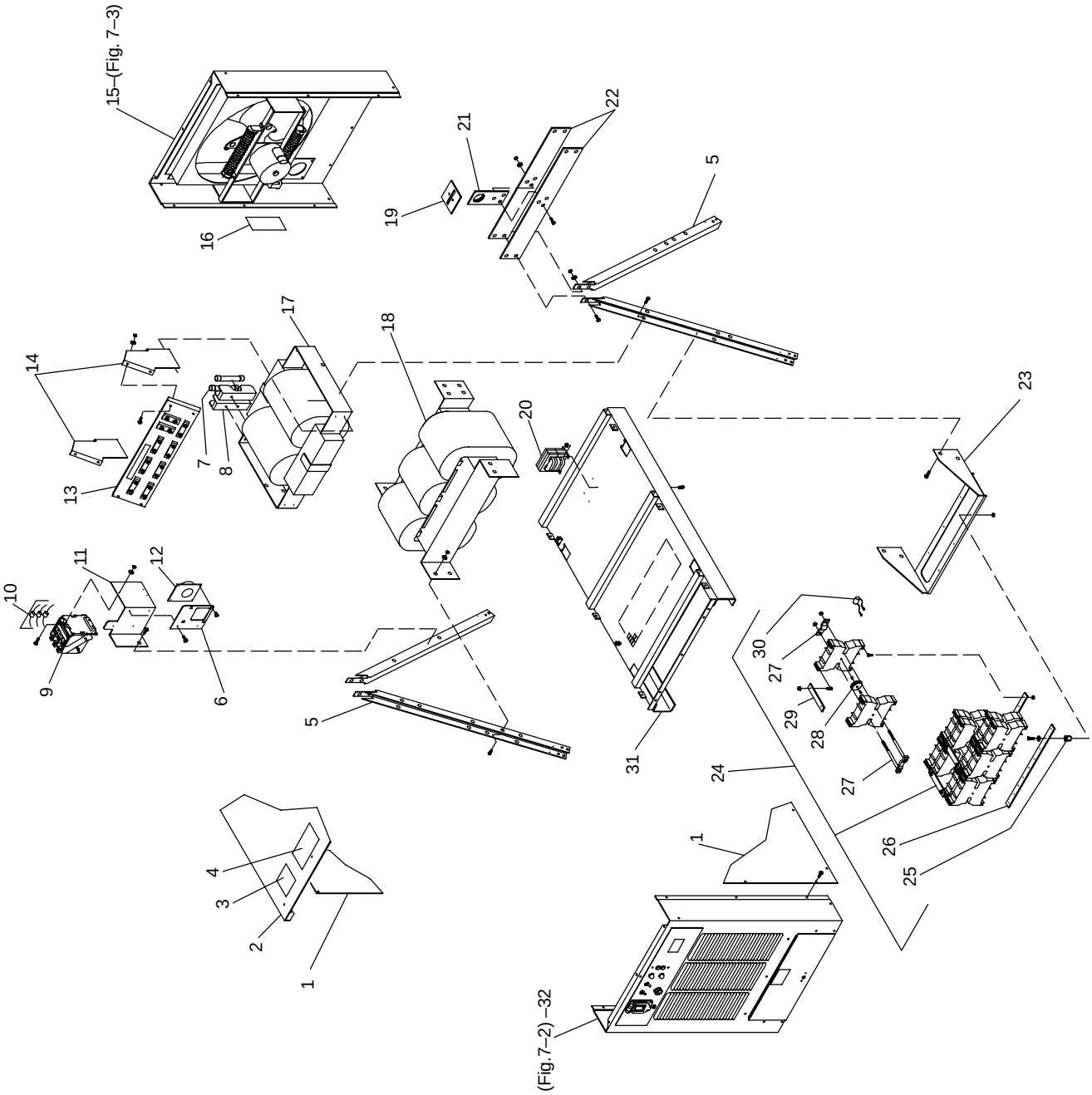

☞ *Hardware is common and not available unless listed.*

801 981-A

Figure 7-1. Main Assembly

Item No.	Dia. Mkgs.	Part No.	Description	Quantity
			Figure 7-1. Main Assembly	
1		071 624	PANEL, side	2
2		+070 555	COVER, top	1
3		134 327	LABEL, warning general precautionary	1
4		185 860	LABEL, warning electric shock	1
5		184 340	CHANNEL, upright	4
6		188 403	BRACKET, mtg lem	1
7	F1,F2	*012 639	FUSE, crtg 6A 600 V	2
8		070 404	FUSE, holder	2
9	W	099 044	CONTACTOR, size 3-1/2 3P	1
	W1,2	048 731	INTERLOCK, cntor No. size 3	2
10	C1-3	194 066	CAPACITOR	3
11		184 349	BRACKET, mtg contactor	1
12	HD1	148 417	TRANSDUCER, current 1000A	1
	PLG1	130 204	CONNECTOR & SOCKET	1
13	TE2	213 419	TERMINAL ASSEMBLY, pwr output	1
14		184 359	BRACKET, mtg terminal assembly	2
15		Fig 7-3	REAR PANEL ASSEMBLY	1
16		185 856	LABEL, warning electric shock	1
17	Z1	184 350	STABILIZER	1
18	T1	184 406	TRANSFORMER, pwr main (460 model)	1
18	T1	188 222	TRANSFORMER, pwr main (575 model)	1
18	T1	185 360	TRANSFORMER, pwr main (400 50/60hz model)	1
	TP2	163 266	THERMOSTAT, NC in trans. 150° C overload	1
	TP1	168 891	THERMOSTAT, NC in trans. 80° C fan on demand	1
19		184 344	STOP, cover	1
		026 627	GASKET, lift eye	1
20	T2	094 237	TRANSFORMER, kva 1/2 115-230/460 (460 model)	1
20	T2	096 145	TRANSFORMER, kva 1/2 115-230/575 (575 model)	1
20	T2	185 359	TRANSFORMER, kva 1/2 115-220/400 (400 50/60hz model)	1
21		184 342	LIFT, eye	1
22		184 341	BAR, cross lift eye	2
23		184 345	BRACKET, rectifier	1
24	SR1	213 441	RECTIFIER, scr main (consisting of)	1
25		026 947	STAND-OFF, insul .250-20 x 1.000 lg	3
26		185 206	STRIP, mtg rectifier	2
27		196 496	CLAMP, thyristor rectifier 4.750	6
28	SCR1-6	148 091	THYRISTOR, scr 865 A 300 V	6
29		185 207	STRIP, spacing heat sink	3
		082 852	BUS BAR, output rectifier	2
30	C11-16/ R11-16	185 183	CAPACITOR/RESISTOR	6
	TP3, 4, 5 6, 7, 8	192 732	THERMOSTAT, NC open 203° F in SR1 overload	6
	TP9, 10, 11, 12, 13, 14	168 894	THERMOSTAT, NC open 125° F in SR1 fan on demand	6
31		184 343	BASE	1
32		Fig 7-2	FRONT PANEL ASSEMBLY	1

+When ordering a component originally displaying a precautionary label, the label should also be ordered.

*Recommended Spare Parts.

To maintain the factory original performance of your equipment, use only Manufacturer's Suggested Replacement Parts. Model and serial number required when ordering parts from your local distributor.

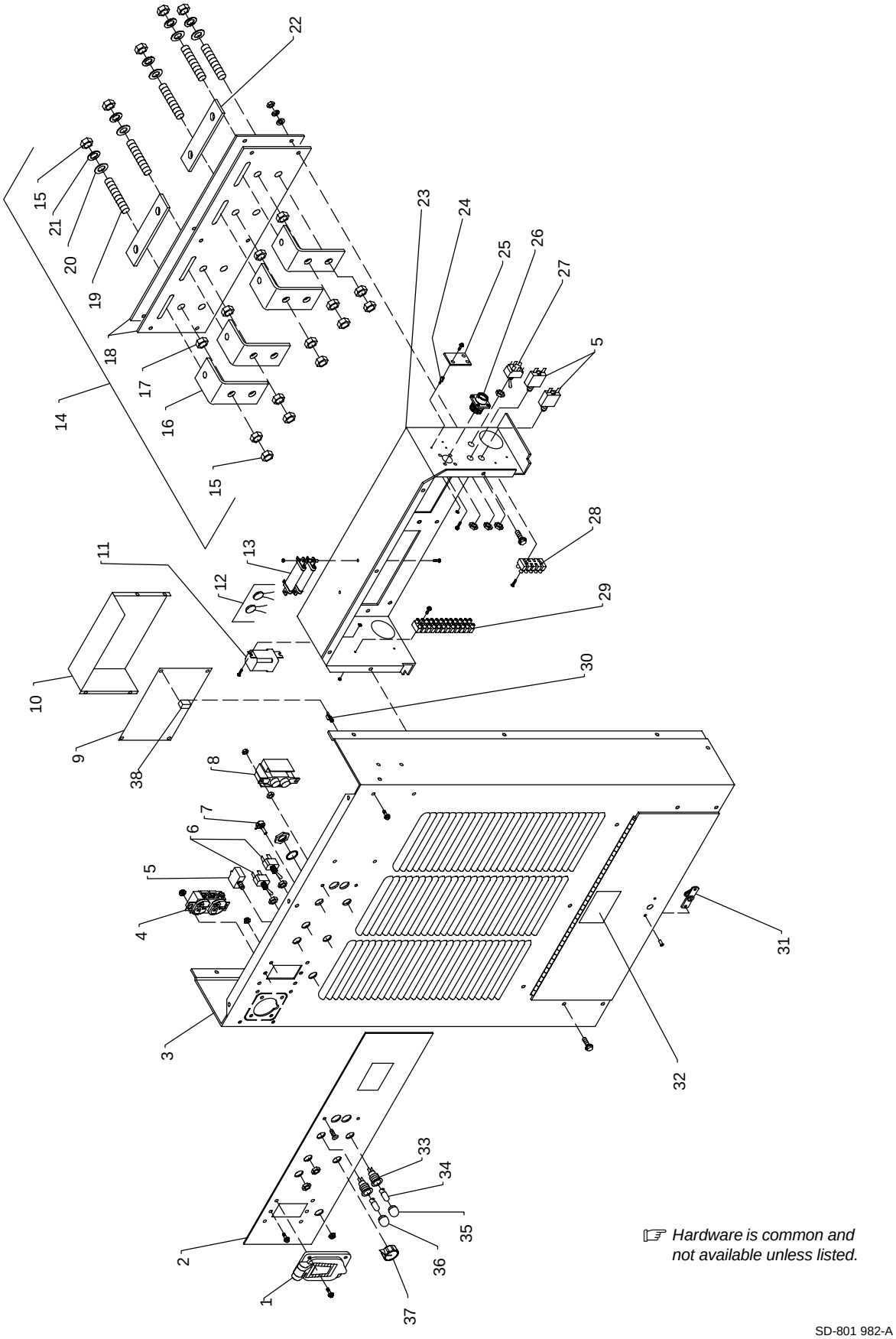

Figure 7-2. Front Panel Assembly

Item No.	Dia. Mkgs.	Part No.	Description	Quantity
			Figure 7-2. Front Panel Assembly (Figure 7-1 Item 32)	
1		038 805	COVER, receptacle weatherproof	1
2			NAMEPLATE, (order by model and serial number)	1
3		+187 759	PANEL, front	1
4	RC1	604 176	RECEPTACLE, str dx grd 2P3W 15A 125V (460 & 575 models)	1
4	RC1	176 355	RECEPTACLE, str 2P3W 16A 220V (400 50/60hz model)	1
5	CB1-3	053 283	CIRCUIT BREAKER, man reset 1P 15A 250VAC (460 & 575 models)	3
5	CB1-4	053 283	CIRCUIT BREAKER, man reset 1P 15A 250VAC (400 50/60hz model)	4
6	S1,2	011 609	SWITCH, tglSPDT 15A 125VAC	2
7	R5	030 109	POTENTIOMETER, cp std slot 1/T 2W 5K linear	1
8	PB1	011 636	SWITCH, pushbutton	1
9	PC1	191 268	CIRCUIT CARD, control (460 & 575 models)	1
9	PC1	192 444	CIRCUIT CARD, control (400 50/60hz model)	1
	PLG11	163 467	CONNECTOR & SOCKETS	1
	PLG12	152 249	CONNECTOR & SOCKETS	1
	PLG13	158 720	CONNECTOR & SOCKETS	1
10		192 866	COVER, circuit card	1
11	CR1	039 498	RELAY, encl 120 VAC 3PDT 10A	1
12	C9,10	130 710	CAPACITOR ASSEMBLY	2
13	R3,4	136 076	RESISTOR, ww fxd 30W 200 ohm	2
14		059 567	TERMINAL, pwr output (consisting of)	1
15		601 841	NUT, brs hex jam .625-11	16
16		038 032	BUS BAR, neg and pos sec	4
		208 935	TERMINAL, hammer on 3/0 – 4/0	1
17		601 842	NUT, brs hex full .625-11	8
18		059 566	TERMINAL BOARD, pwr output	2
19		038 909	STUD, brs .625-11 x 3.000	8
20		602 249	WASHER, flat stl SAE .625	8
21		602 219	WASHER, lock stl external tooth .625	8
22		059 983	BUS BAR, jumper secondary	2
23		188 514	BRACKET, mtg term assy	1
24		110 375	STAND-OFF, support pc card	5
25	PC2	148 030	CIRCUIT CARD, filter	1
26	RC7	134 735	CONNECTOR, circ ms/cpc 14 skt	1
27	S3	011 611	SWITCH, tgl DPDT 15A 125 VAC	1
28	TE4	192 357	BLOCK, term 40A 5P	1
29	TE3	188 719	BLOCK, term 40A 12P	1
30		098 691	STAND-OFF, No. 6-32 x .500	2
31		605 583	CATCH, spr loaded door	1
32		186 281	LABEL, warning electric shock	1
33		027 631	HOUSING, light ind	2
34	PL1,2	027 629	BULB, incand	2
35		182 704	LENS, light ind white	1
36		176 246	LENS, light ind amber	1
37		097 924	KNOB, pointer	1
38		209 319	KIT, variable balance	1

+When ordering a component originally displaying a precautionary label, the label should also be ordered.

To maintain the factory original performance of your equipment, use only Manufacturer's Suggested Replacement Parts. Model and serial number required when ordering parts from your local distributor.

Item No.	Dia. Mkgs.	Part No.	Description	Quantity
			Figure 7-3. Rear Panel Assembly (Figure 7-1 Item 15)	
1	CR2	059 266	RELAY, encl 120 VAC DPDT 10A/120 VAC	1
2		209 477	WINDTUNNEL, 20in	1
3	R1,2	097 459	RESISTOR, ww fxd 375W 20 ohm	2
4		032 616	BLADE, fan 20.000 3wg 21deg	1
5		+070 558	PANEL, rear	1
6		183 167	CONNECTOR, clamp cable 2.000	1
7		102 207	PLATE, adapter power cord	1
8	FM	032 605	MOTOR, cap perm sp 1/4hp 230 VAC 1625rpm	1

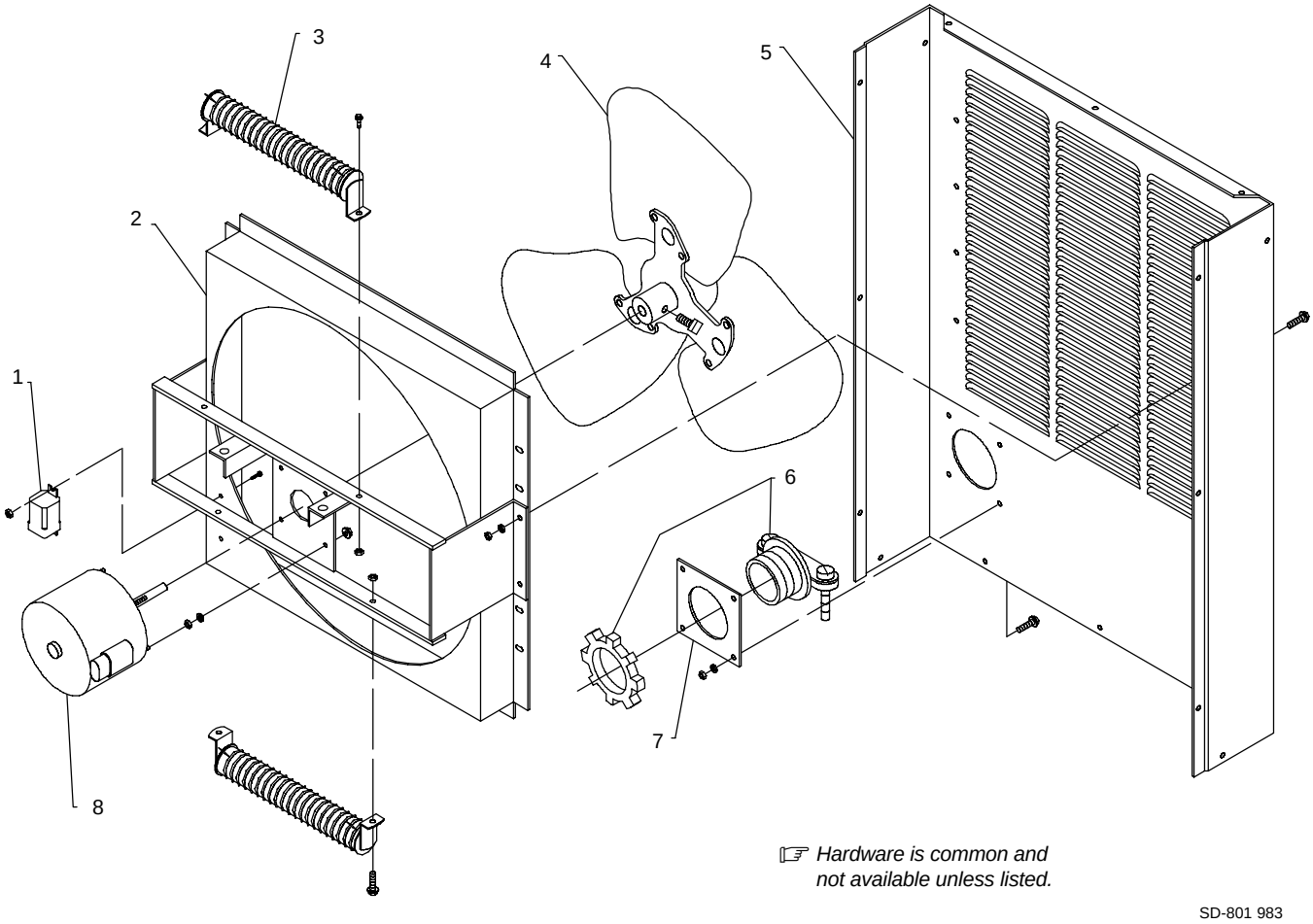

Figure 7-3. Rear Panel Assembly

+When ordering a component originally displaying a precautionary label, the label should also be ordered.

To maintain the factory original performance of your equipment, use only Manufacturer's Suggested Replacement Parts. Model and serial number required when ordering parts from your local distributor.

Notes

Notes

Warranty Questions?

Call
1-800-4-A-MILLER
for your local
Miller distributor.

Your distributor also gives you ...

Service
You always get the fast, reliable response you need. Most replacement parts can be in your hands in 24 hours.

Support
Need fast answers to the tough welding questions? Contact your distributor. The expertise of the distributor and Miller is there to help you, every step of the way.

TRUE BLUE® WARRANTY

Effective January 1, 2002
(Equipment with a serial number preface of “LC” or newer)

This limited warranty supersedes all previous Miller warranties and is exclusive with no other guarantees or warranties expressed or implied.

LIMITED WARRANTY – Subject to the terms and conditions below, Miller Electric Mfg. Co., Appleton, Wisconsin, warrants to its original retail purchaser that new Miller equipment sold after the effective date of this limited warranty is free of defects in material and workmanship at the time it is shipped by Miller. THIS WARRANTY IS EXPRESSLY IN LIEU OF ALL OTHER WARRANTIES, EXPRESS OR IMPLIED, INCLUDING THE WARRANTIES OF MERCHANTABILITY AND FITNESS.

Within the warranty periods listed below, Miller will repair or replace any warranted parts or components that fail due to such defects in material or workmanship. Miller must be notified in writing within thirty (30) days of such defect or failure, at which time Miller will provide instructions on the warranty claim procedures to be followed.

Miller shall honor warranty claims on warranted equipment listed below in the event of such a failure within the warranty time periods. All warranty time periods start on the date that the equipment was delivered to the original retail purchaser, or one year after the equipment is sent to a North American distributor or eighteen months after the equipment is sent to an International distributor.

1. 5 Years Parts — 3 Years Labor
   * Original main power rectifiers
   * Inverters (input and output rectifiers only)
2. 3 Years — Parts and Labor
   * Transformer/Rectifier Power Sources
   * Plasma Arc Cutting Power Sources
   * Semi-Automatic and Automatic Wire Feeders
   * Inverter Power Supplies
   * Intellitig
   * Engine Driven Welding Generators
     (NOTE: Engines are warranted separately by the engine manufacturer.)
3. 1 Year — Parts and Labor Unless Specified
   * DS-2 Wire Feeder
   * Motor Driven Guns (w/exception of Spoolmate Spoolguns)
   * Process Controllers
   * Positioners and Controllers
   * Automatic Motion Devices
   * RFCS Foot Controls
   * Induction Heating Power Sources
   * Water Coolant Systems
   * Flowgauge and Flowmeter Regulators (No Labor)
   * HF Units
   * Grids
   * Maxstar 85, 140
   * Spot Welders
   * Load Banks
   * Racks
   * Running Gear/Trailers
   * Plasma Cutting Torches (except APT & SAF Models)
   * Field Options
     (NOTE: Field options are covered under True Blue® for the remaining warranty period of the product they are installed in, or for a minimum of one year — whichever is greater.)
4. 6 Months — Batteries
5. 90 Days — Parts
   * MIG Guns/TIG Torches
   * Induction Heating Coils and Blankets
   * APT, ZIPCUT & PLAZCUT Model Plasma Cutting Torches
   * Remote Controls
   * Accessory Kits
   * Replacement Parts (No labor)
   * Spoolmate Spoolguns
   * Canvas Covers

Miller's True Blue® Limited Warranty shall not apply to:

1. **Consumable components; such as contact tips, cutting nozzles, contactors, brushes, slip rings, relays or parts that fail due to normal wear. (Exception: brushes, slip rings, and relays are covered on Bobcat, Trailblazer, and Legend models.)**
2. Items furnished by Miller, but manufactured by others, such as engines or trade accessories. These items are covered by the manufacturer's warranty, if any.
3. Equipment that has been modified by any party other than Miller, or equipment that has been improperly installed, improperly operated or misused based upon industry standards, or equipment which has not had reasonable and necessary maintenance, or equipment which has been used for operation outside of the specifications for the equipment.

MILLER PRODUCTS ARE INTENDED FOR PURCHASE AND USE BY COMMERCIAL/INDUSTRIAL USERS AND PERSONS TRAINED AND EXPERIENCED IN THE USE AND MAINTENANCE OF WELDING EQUIPMENT.

In the event of a warranty claim covered by this warranty, the exclusive remedies shall be, at Miller's option: (1) repair; or (2) replacement; or, where authorized in writing by Miller in appropriate cases, (3) the reasonable cost of repair or replacement at an authorized Miller service station; or (4) payment of or credit for the purchase price (less reasonable depreciation based upon actual use) upon return of the goods at customer's risk and expense. Miller's option of repair or replacement will be F.O.B., Factory at Appleton, Wisconsin, or F.O.B. at a Miller authorized service facility as determined by Miller. Therefore no compensation or reimbursement for transportation costs of any kind will be allowed.

TO THE EXTENT PERMITTED BY LAW, THE REMEDIES PROVIDED HEREIN ARE THE SOLE AND EXCLUSIVE REMEDIES. IN NO EVENT SHALL MILLER BE LIABLE FOR DIRECT, INDIRECT, SPECIAL, INCIDENTAL OR CONSEQUENTIAL DAMAGES (INCLUDING LOSS OF PROFIT), WHETHER BASED ON CONTRACT, TORT OR ANY OTHER LEGAL THEORY.

ANY EXPRESS WARRANTY NOT PROVIDED HEREIN AND ANY IMPLIED WARRANTY, GUARANTY OR REPRESENTATION AS TO PERFORMANCE, AND ANY REMEDY FOR BREACH OF CONTRACT TORT OR ANY OTHER LEGAL THEORY WHICH, BUT FOR THIS PROVISION, MIGHT ARISE BY IMPLICATION, OPERATION OF LAW, CUSTOM OF TRADE OR COURSE OF DEALING, INCLUDING ANY IMPLIED WARRANTY OF MERCHANTABILITY OR FITNESS FOR PARTICULAR PURPOSE, WITH RESPECT TO ANY AND ALL EQUIPMENT FURNISHED BY MILLER IS EXCLUDED AND DISCLAIMED BY MILLER.

Some states in the U.S.A. do not allow limitations of how long an implied warranty lasts, or the exclusion of incidental, indirect, special or consequential damages, so the above limitation or exclusion may not apply to you. This warranty provides specific legal rights, and other rights may be available, but may vary from state to state.

In Canada, legislation in some provinces provides for certain additional warranties or remedies other than as stated herein, and to the extent that they may not be waived, the limitations and exclusions set out above may not apply. This Limited Warranty provides specific legal rights, and other rights may be available, but may vary from province to province.

miller_warr 6/02

Owner's Record

Please complete and retain with your personal records.

Model Name Serial/Style Number

Purchase Date (Date which equipment was delivered to original customer.)

Distributor

Address

City

State Zip

For Service

Call 1-800-4-A-Miller or see our website at www.MillerWelds.com to locate a DISTRIBUTOR or SERVICE AGENCY near you.

Always provide Model Name and Serial/Style Number.

Contact your Distributor for:

- Welding Supplies and Consumables
- Options and Accessories
- Personal Safety Equipment
- Service and Repair
- Replacement Parts
- Training (Schools, Videos, Books)
- Technical Manuals (Servicing Information and Parts)
- Circuit Diagrams
- Welding Process Handbooks

Contact the Delivering Carrier for:

File a claim for loss or damage during shipment.

For assistance in filing or settling claims, contact your distributor and/or equipment manufacturer's Transportation Department.

Miller Electric Mfg. Co.
An Illinois Tool Works Company
1635 West Spencer Street
Appleton, WI 54914 USA

International Headquarters–USA
USA Phone: 920-735-4505 Auto-Attended
USA & Canada FAX: 920-735-4134
International FAX: 920-735-4125

European Headquarters – United Kingdom
Phone: 44 (0) 1204-593493
FAX: 44 (0) 1204-598066

www.MillerWelds.com

PRINTED IN USA

© 2002 Miller Electric Mfg. Co. 1/02